JVC

SERVICE MANUAL

MODEL

KD-A66 A/B/C/E/J/U

STEREO CASSETTE DECK

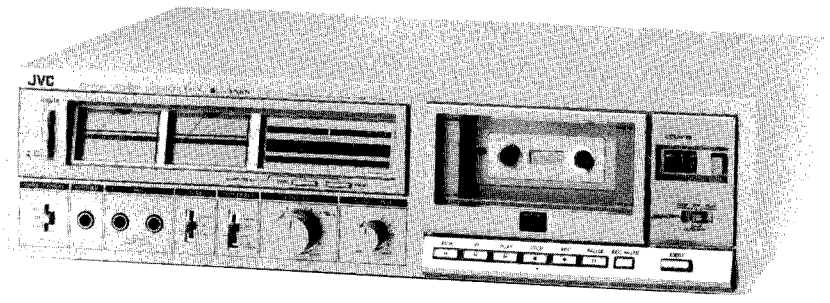

No. 4193
June 1980

Contents

	Page
Specifications	2
Features	3
Controls and Connections	3
Main Parts Location	4
Description on New Technology	5
Maintenance	10
Removal of the Main Parts	10
Main Adjustments	13
Block Diagram	20
Instruction of ICs	22
Standard Schematic Diagram	
(Main Amp Circuit)	23
(Mechanical Control Circuit)	24
(Computer Circuit)	25
Wiring (1) ~ (3)	26 ~28
Enclosure Assembly and Electrical Parts List	30
Enclosure Assembly and Electrical Parts	33
Mechanical Component Parts	34
Mechanical Component Parts List	35
Main Amp P.W. Board Parts	37
Computer P.W.B., Mechanical Control P.W.B	38
Main Amp P.W. Board Parts List	39
Computer P.W. Board Parts List	42
Mecha Control P.W. Board Parts	45
Mecha Control P.W. Board Parts List	46
Other P.W. Board Parts	47
Other P.W. Board Parts List	48
Packing, Packing Material List, Accessories	49

Specifications

Type : Component stereo cassette deck
Track system : 4-track, 2-channel
Tape speed : 1-7/8 inch/sec (4.8 cm/sec)
Frequency response :
(-20 VU recording)
Metal tape *1 ; 15 – 18,000Hz
25 – 16,000Hz (±3dB)
SA/Chrome tape *2 15 – 18,000Hz
25 – 16,000Hz (±3dB)
SF/Normal tape *3 15 – 17,000Hz
25 – 15,000Hz (±3dB)
(0 VU recording)
Metal tape 25 – 12,500Hz (±3dB)
SA/Chrome tape 25 – 8,000Hz (±3dB)
SF/Normal tape 25 – 8,000Hz (±3dB)
Frequency response when using the computer B.E.S.T. tuning system
(-20 VU recording)
Metal tape 40 – 12,500Hz (±1dB)
SA/Chrome tape 40 – 12,500Hz (±1dB)
SF/Normal tape 40 – 12,500Hz (±1dB)
Those values are almost the same for all types of tapes when the computer B.E.S.T. tuning system is used.
Note: *1 ..... SCOTCH METAFINE or Equivalent
*2 ..... TDK SA or Equivalent
*3 ..... MAXELL UD or Equivalent
S/N ratio : 60dB (from peak level, weighted, Metal tape)
The S/N is improved by 5dB at 1 kHz and by 10dB above 5kHz with ANRS on.
(DIN 45 500 weighted)
Effect of Super ANRS :
(Normal tape) Improvement of S/N:
the same as with ANRS
Improvement of frequency response:
0 VU recording; 6dB at 10kHz
+5 VU recording; 12dB at 10kHz
Improvement of distortion:
0 VU recording; 3% or less at 10kHz
+5 VU recording; 3% or less at 10kHz
Wow and flutter : 0.04% (WRMS), 0.14% (DIN 45 500)
Crosstalk : 65dB (1kHz)
Harmonic distortion : K3; 0.4%, THD; 1.0% (metal tape, 1kHz 0VU)
Bias : AC bias
Erasure : AC erasure
Heads : 2SA (Sen-Alloy) heads
X-cut head for recording and playback
2-Gap head for erasing
Motors : Electronic governed DC motor (for Capstan)
DC motor (for Reel)
Fast forward time : 85 sec. with C-60 cassette
Rewind time : 85 sec. with C-60 cassette
Semiconductors : 18 ICs, 77 transistors, 1 FET
52 diodes, 12 LEDs
Input terminals :
Mic jack x 2 ; Max. sensitivity; 0.2mV (-72dBs)
Matching impedance; 600Ω ~ 10kΩ
Input jack x 2 ; Min. input level; 80mV (-20dBs)
Input impedance; 100kΩ
Output terminals :
Output jack x 2 ; Output level; 0 ~ 500mV
Output impedance; 5kΩ
Phones jack x 1 ; Output level; 0 ~ 0.5mV
Matching impedance; 8Ω ~ 1kΩ
Power requirement : AC 240V, 50Hz (KD-A66A)
AC 120V, 60Hz (KD-A66C/J)
AC 240/220/120V, 50/60Hz (KD-A66B/E)
AC 240/220/120/100V, 50/60Hz (KD-A66U)
Power consumption : 30W
Dimensions : 17-3/4"(450mm)W
4-5/8" (118mm)H
13" (331mm)D
(with feet, buttons, switches)
Weight : 17.4 lbs (7.9 kg)

Design and specifications subject to change without notice.

Features

1. Built-in computer B.E.S.T. Tuning System for automatic adjustment of Bias, Equalization and Sensitivity of Tape.
2. Metal tape compatibility having 4 tape select positions.
3. Full-logic control operation with 2 motor ID (Independent Drive) mechanism.
4. X-cut SA (SEN-ALLOY) record/play head for an improved frequency response over Permalloy yet as durable as ferrite.
5. SA (SEN-ALLOY) erase head for perfect compatibility with Metal Tape.
6. LED indication for cassette operation buttons (REC, PLAY, PAUSE) light for the respective operation mode so as to make checking easier.
7. ANRS, and Super ANRS for decreasing hiss-noise and improving linearity at high frequency.
8. 5 LED multi-peak level indicators for easy check of the recording level.
9. Continuous TIMER STAND-BY mechanism for recording when you are not at home using the REC-OFF-PLAY select switch.
10. REC MUTE button for making a non-recorded section on the tape program.
11. Memory switch for listening to the same program repeatedly.
12. Remote control terminal (R-50E optional)

Controls and Connections

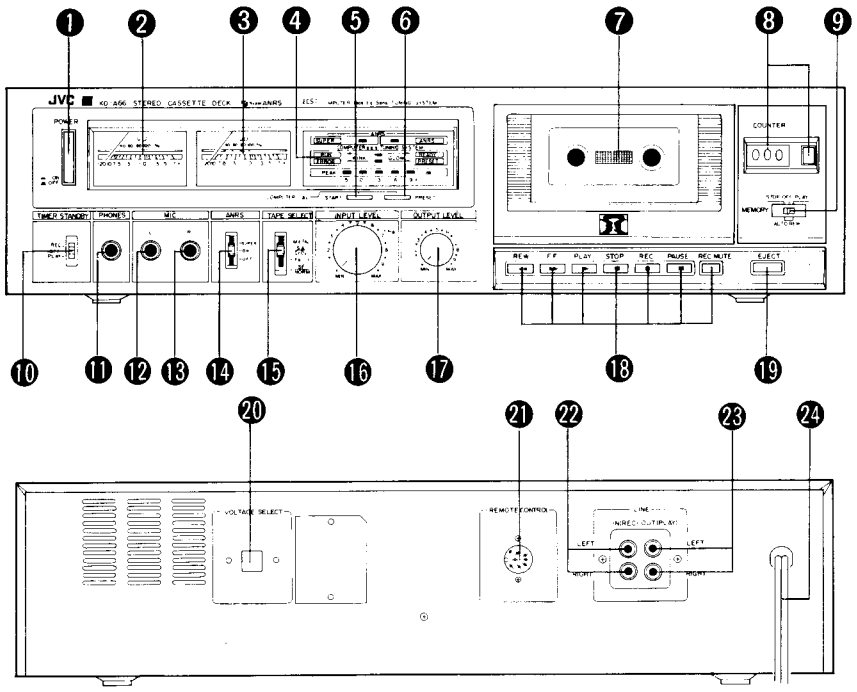

❶ POWER switch
❷ VU meter (left channel)
❸ VU meter (right channel)
❹ Indicators (see to page 4)
❺ Computer START button
❻ Computer PRESET button
❼ Cassette holder
❽ Tape COUNTER/counter reset button
❾ MEMORY/AUTO REW switch
❿ TIMER STANDBY switch
⓫ Headphone jack [PHONES]
⓬ Microphone jack (Left channel) [MIC-L]
⓭ Microphone jack (right channel) [MIC-R]
⓮ ANRS switch
⓯ TAPE SELECT switch
⓰ INPUT LEVEL controls
forward knob – left channel
rearward knob – right channel
⓱ OUTPUT LEVEL control
⓲ Cassette operation button
◀◀ REW (Rewind) button
▶▶ FF (fast-forward) button
▶ PLAY button
■ STOP button
○ REC (recording) button
❚❚ PAUSE button
REC MUTE button
⓳ EJECT button
⓴ Voltage selector (KD-A66B/C/E/J/U)
㉑ Remote control socket
㉒ LINE IN terminals
㉓ LINE OUT terminals
㉔ Power cord

Indicators

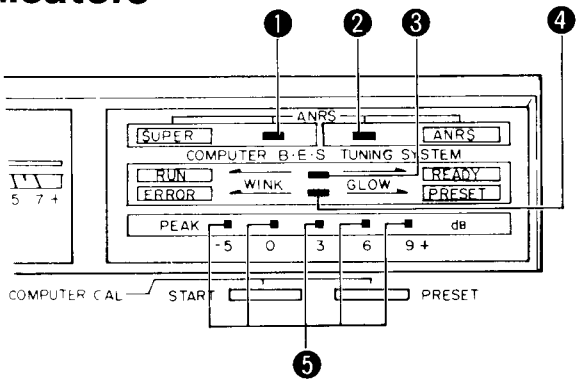

❶ Super ANRS indicator
(The LED lights when super ANRS or ANRS is ON)
❷ ANRS indicator
❸ RUN (wink)/READY (glow) indicator
❹ ERROR (wink)/PRESET (glow) indicator
❺ Multi-peak level indicator

Main Parts Location

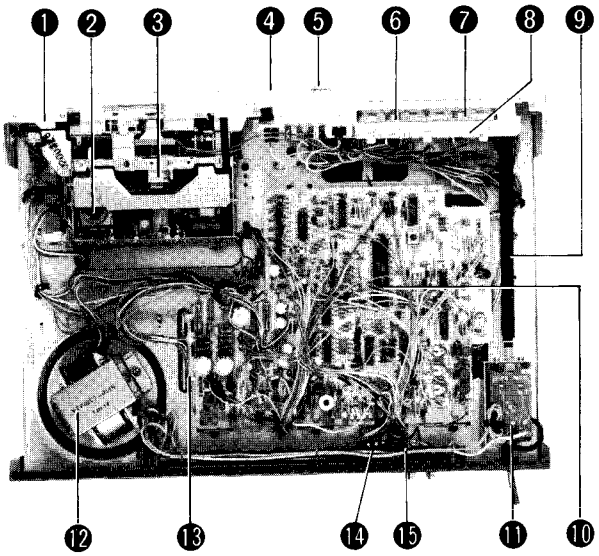

❶ Front panel assembly
❷ DC solenoid
❸ Reel motor
❹ Output level control
❺ Input level control
❻ VU meter (right channel)
❼ VU meter (left channel)
❽ Meter cover
❾ Remote bar (for power switch)
❿ Computer P.W. Board assembly
⓫ Power switch
⓬ Power transformer
⓭ Power supply integrant circuit P.W.B assembly
⓮ Remote control socket
⓯ Pin jack assembly

(Mechanical parts)
⓰ Switch holder (left switch)
⓱ Supply reel assembly
⓲ Idler assembly
⓳ Reel motor pully
⓴ Take-up reel assembly
㉑ Connector wire (for slide base)
㉒ Counter belt
㉓ Slide base assembly
㉔ Erase head
㉕ REC/PB head
㉖ Pinch roller assembly
㉗ Capstan

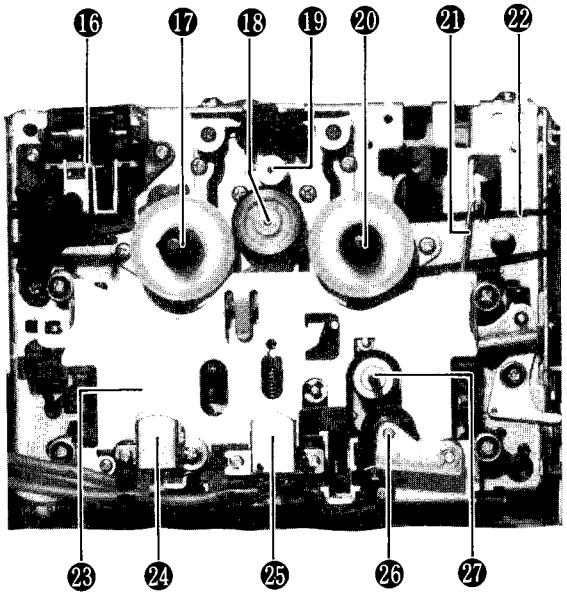

Description on New Technology

Computer B.E.S.T. System

Introduction

The B.E.S.T. (Bias Equalizer Sensitivity Tuning) system which is employed in the KD-A66 is basically the same as the preceding KD-A8 version and has also been provided with various improvements for an enhanced performance.
The B.E.S.T. system employs a microcomputer for the purpose of setting the proper optimum bias current and sensitivity for tape.

1. Bias

As seen in Fig. 1 (the relationship between distortion rate and bias current at the 1 kHz to 7 kHz signals), the output level decreases when a larger bias current is applied. In this case especially, the 7 kHz signal is sharply attenuated.
Further, when the bias current is decreased, the three-dimensional distortion increases. Accordingly, the bias current is an important factor for determining the frequency response and the distortion rate.
It is therefore desirable that an optimum bias current is set for each tape.

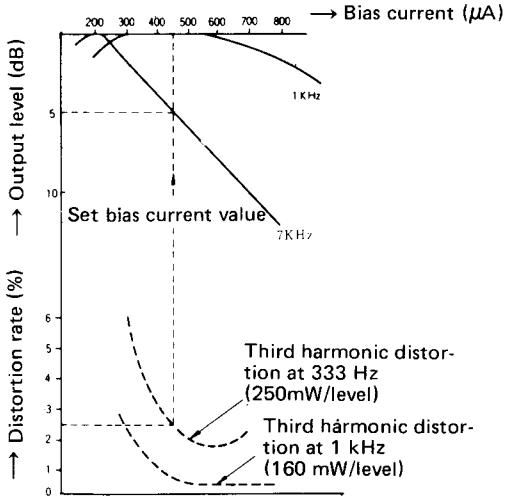

Fig. 1

2. Equalizer

As seen in Fig. 2 (with each tape having its optimum bias current set), this bias current is determined by taking into account the high-band molecular characteristic and distortion rate of the particular tape. Equalization level must then be set to obtain a flat molecular characteristic corresponding to that bias current.
Until now, the equalization level has been determined by ear and an accurate tuning can only be performed by experience.
With this tuning system, the equalization level is automatically set by a microcomputer.

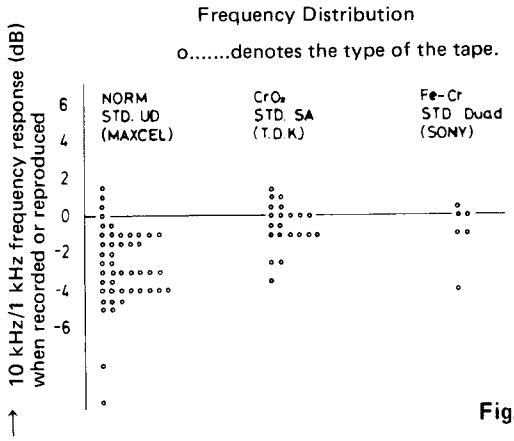

Fig. 2

3. Sensitivity

In tapes, the recording and reproduction levels do not necessarily coincide with each other. The difference between the recording and reproduction levels appears as a beat in the frequency response of a noise reduction circuit such as the ANRS circuit, the Super ANRS circuit, etc.
In this tuning system, the difference between these levels is limited within 1 dB.

Features:

1. Automatic setting of the optimum bias current for the tape.
2. Automatic setting of the level difference to within ±1 dB, in the case of 10 kHz high-band frequency which tends to differ between the recording and reproduction levels.
3. Automatic setting of the tape sensitivity to within a ±1 dB error by the ANRS circuit.
4. For tapes which cannot be automatically adjusted, its sensitivity is indicated, thus permitting normal recording in the state in which respective values have been preset.

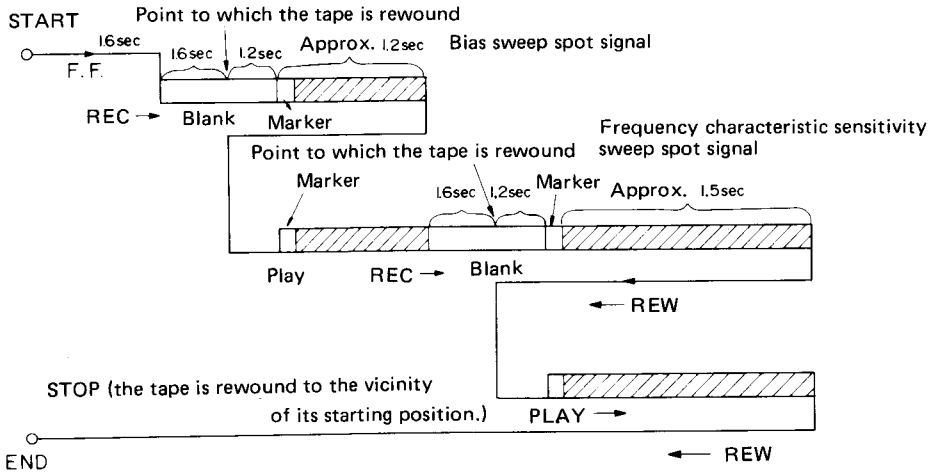

Fig. 3

Operation

The operation is described in accordance with Fig. 3 (operational timing chart).

1. Press the START button.
   At this time, the READY LED in the display section flickers, indicating that the computer is in operation.
2. The tape is rapidly fed at 1.6 sec to avoid the use of the leader tape section.
3. The recorder enters the recording mode.
   In this mode, a blank recording (no-signal recording) is performed for 2.8 sec to stabilize the mechanical and electrical systems. Subsequently, two marker signals and eight pairs of 1 and 7 kHz test signals are recorded. At this time, the bias current is varied 8 steps every 60 msec by +10% to -30% more than the preset value. (The bias current, equalization level and tape sensitivity values are preset, each determined by using a standard tape.) (Fig. 4)

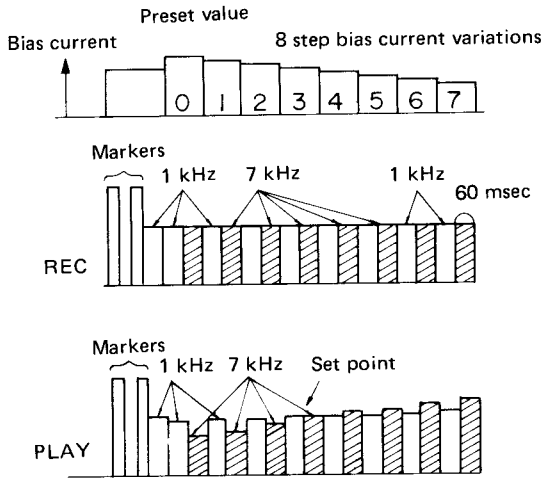

Fig. 4

4. The tape is rewound to return to the position at the 1.6 sec lapse point from the beginning of the previous blank recording.
5. Data on the tape is reproduced, and the reproduction levels of the 1 and 7 kHz test signals are compared in order to properly determine their coinciding step.
6. The microcomputer detects these coincident steps. At this time, the recorder initiates recording and performs a blank recording for 2.8 sec. Subsequently, the recorder records the markers, and enters the 12.5 kHz signal recording state after recording the 1 kHz reference level, and increasingly varies the equalization level of the right channel by 8 steps very 60 msec.
   Further, after recording the 1 kHz reference signal of the left channel, the recorder increasingly varies the equalization level. Next, to adjust the tape sensitivity, the recorder increasingly varies the 1 kHz recording level by 8 steps every 60 msec. The difference between the smallest and largest levels is ±4 dB. (Fig. 5)
7. As shown in Fig. 2, the tape is rewound to the position at the 1.5 sec lapse from the beginning of recording; see item 6.

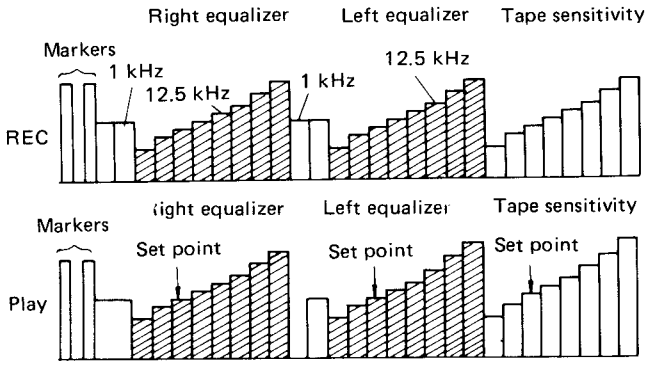

Fig. 5

8. The recorder enters the reproduction mode, and the microcomputer first compares the reproduction levels of the 1 kHz reference signal and the 12.5 kHz signal of the right channel.
   In recording, since the 12.5 kHz signal is increasingly varied by the right equalizer, its reproduction level will coincide with that of the 1 kHz reference signal. Subsequent to storing this coincident point, the same operation is also performed on the left channel.
   Next, the tape sensitivity is adjusted. Prior to this, the recorder stores the reproduction level of the 1 kHz reference signal of the right channel during recording (item 6), and during reproducing, seeks its coincident point with the 8-step level varied tape sensitivity adjusting signal.

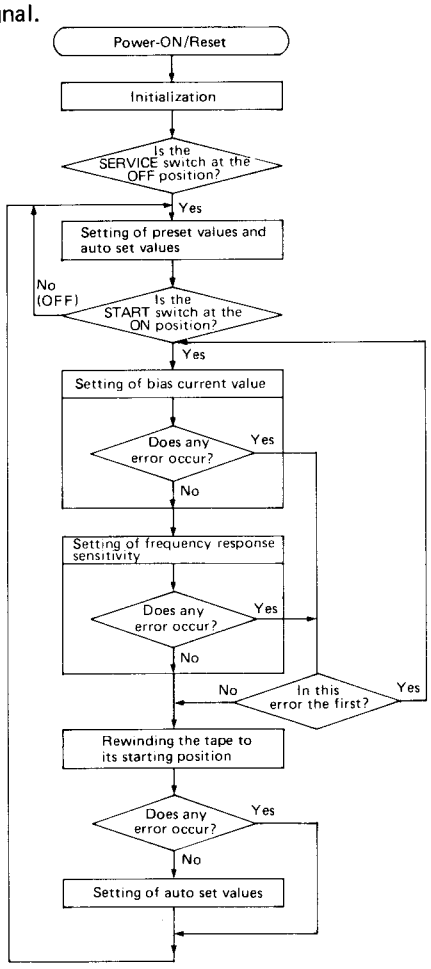

Fig. 6

9. Upon completion of tuning the equalizer and the tape sensitivity (item 8), the tape is rewound to return to the position as described in item 1. Then, the flickering READY LED lights continuously.
   The above-mentioned operation is shown in Fig. 6.

The basic operation is as previously described. In addition, the microcomputer is provided for the functioning of the tape deck.
Upon application of power, the microcomputer is automatically reset, thus resulting in a temporary stoppage of all output.

SERVICE switch

This switch is used to adjust the tape deck.
The microcomputer with 7 adjustment program checks the generation of the test signals, the variation of the bias current, the variation of the equalization level, the variation of the tape sensitivity, the operation of the electronic mechanism, and the like.
When the SERVICE switch is at the OFF position, the microcomputer confirms that the B.E.S.T. system is functioning. At this time, the microcomputer emits those auto set values when the B.E.S.T. system completes operation and emits the preset values even if an error occurs during the operation. Thus, even when the auto setting of the respective values is impossible, normal recording is possible since the preset values are emitted.
Subsequently, the microcomputer waits for the START switch to be pressed. When this switch is pressed, the microcomputer sets bias current, equalization level and tape sensitivity values.
In this process, when auto setting is impossible, the microcomputer returns to the bias setting mode to re-tune. At this time, when an error recurs, the red PRESET LED flickers and the preset values are emitted.
In addition, irrespective of presence or absence of error, the tape is rewound to its starting position. As a result of this, the tape is effectively used. In normal auto setting of the respective values, the rewinding time is about 25 sec.

Operating Principle of Respective Sections

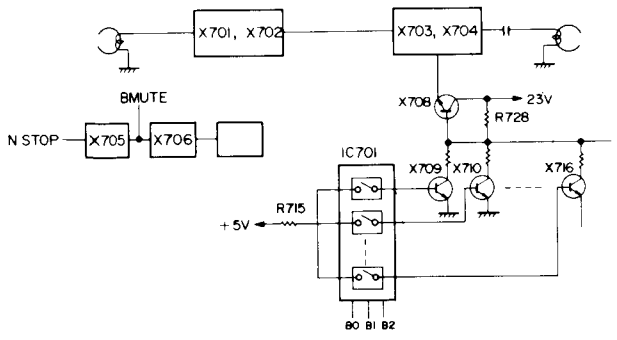

Fig. 7

1. Setting of bias current

Fig. 7 represents the bias current varying circuit employed in the KD-A66.
The bias oscillation circuit consisting of transistors X701 and X702 supplies current to the erase head and also activates the bias amplifier consisting of transistors X703 and X704. As the supply voltage for this bias amplifier is changed in 8 steps by a control signal from the microcomputer, the bias current is changed in 8 stpes.
When the binary control signal from pins 2, 3 and 4 of microcomputer (ICK01) is applied to IC701 which includes 8 electronic ON/OFF switches of 8 circuits, any one circuit alone is turned on. At this point, the base current passes across a specific one of transistors X709 – X716 turning it on.
Concerning transistor X708 which controls the supply voltage for the bias amplifier, its base voltage is determined by a divided voltage by R728 and the associated collector resistance of X709 to X716.
The bias oscillation circuit, which is turned on/off by the BMUTE signal from pin 304 on the computer circuit board, is also turned on/off by the NSTOP signal (the control signal of the brake and solenoid) from pin 512 on the same board when stopping the bias oscillator circuit operation during the PAUSE mode.

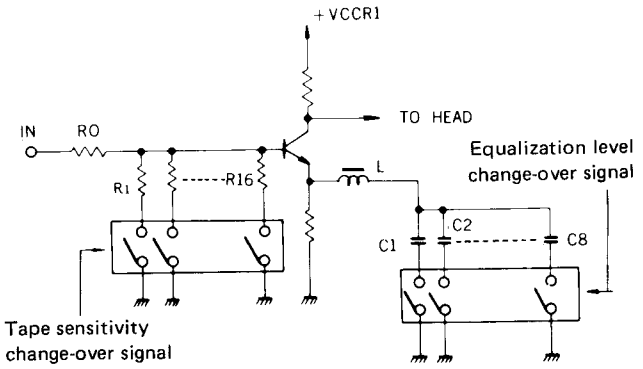

Fig. 8

2. Setting of equalization level and tape sensitivity Fig. 8 represents the recording amplifier section employed in the KD-A66.

The input signal is attenuated by resistor RO and any of resistors R1 – R16 and entered into the specific transistor. At this time, a tape sensitivity select signal emitted from the microcomputer causes the respective resistor in the group of R1 – R16 to be grounded, thus determining the attenuation level. The select signal is transmitted in the form of 4 binary bits and converted into decimal bits. In addition, a CMOS IC incorporating analog switches is used in the select switch unit to protect the audio signal against distortion. This select switch unit permits the change in recording level of ±4 dB.

The LC resonance peaking circuit mounted in parallel with the emitter resistor of the recording amplifier transistor boosts the high frequency of the recording amplifier transistor. With a normal tape, the output level of a 10 kHz signal is higher by about 9 dB than that of a 1 kHz signal.
To avoid this problem, the selection of the capacitor in the peaking circuit is performed to vary the compensation of high frequencies. In this case, the microcomputer emits a 3 binary bit signal, decodes it in 8 steps and switches the appropriate analog switch in the CMOS IC. Thus, the recording level is selected in the range of ±4 dB.

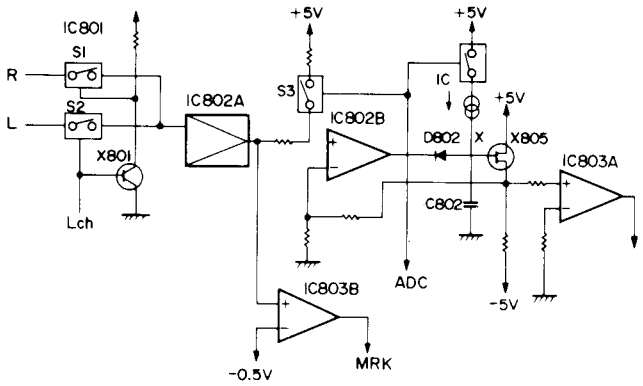

Fig. 9

3. Peak hold A/D converting circuit

In the KD-A66, a 12.5 kHz frequency is selected as the equalizer tuning frequency to improve high band frequency response. In a cassette tape deck with high frequencies, the changes in levels such as are caused by dropout, etc. are enlarged due to the base material of the cassette tape and/or the wound state of the cassette tape. If the optimim state is decided by the reproduction level such as in the B.E.S.T. system, this level change causes incorrect setting of the respective values. To avoid this problem in the KD-A66, a peak hold A/D converter has been developed by the combination of a peak hold circuit and a charge/discharge circuit.
The peak hold A/D converting circuit permits stable level detection even against high frequency dropout. Block diagram is shown in Fig. 9 and timing chart in Fig. 10.

The input signal is classified into a left or right channel signal in IC801 by the Lch signal from the microcomputer, amplified by IC802A and entered into the peak hold circuit consisting of IC802B, C802, D802 and X805, which in turn detects the negative component of the input signal accumulating at capacitor C802.
In the KD-A66, upon completion of the 40 msec operation of the peak hold circuit, S3 and S4 in IC801 are turned on by the ADC signal from the microcomputer. Since S3 functions to apply +5V to the positive input side of IC802B, the output of IC802B is clipped to +5V and the loop in the peak hold circuit is opened by diode D802.

At the same time S4 is turned on and capacitor C802 is charged from the constant current source I1. Since a constant current is supplied to this capacitor, the voltage in it linearly increases in the form of V=I1 x Time/c + Vo (initial voltage).
Since capacitor C802 has been supplied with the negative component of the input signal, when the voltage in it rises with the constant current charge, IC803A detects the moment that this voltage exceeds 0V, and transmits that detection signal as an ADT signal to the microcomputer.
The microcomputer measures the time from when the 40 msec peak hold operation is completed to when the above voltage exceeds 0V, to measure the signal level. Fig. 10 is the timing chart. Here the input signal is subject to peak holding during the 40 msec period and the constant current discharge is performed and the state of 0V excess is shown. AD1 is a normal signal, but this indicates that stable measuring is possible should level change (decrease) occur halfway as in AD2 and AD3.

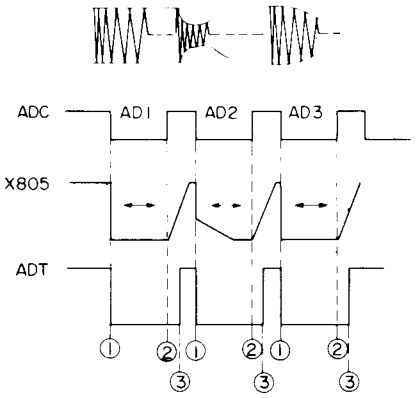

Fig. 10

4. Marker signal detection

When recording while tuning the bias current, equalization level and tape sensitivity, marker signals first enter as shown in Figs 4 and 5. A 40 msec signal of 1 kHz ±50 dB is recorded two time as the marker signals with a 40 msec blank between.
In the B.E.S.T. system, when the tape is rewound after recording the test signals, it returns to its starting position while counting the pulses from the tape counter. This counting is not as accurate as when locating a 60 msec signal. For more accurate counting, the deck waits for the said marker signals to appear in the reproduction state after rewinding the tape.
After the input signal is amplified by IC802A in Fig. 9, it is compared with -0.5V of IC803B in Fig. 5.
When this signal is entered, the output from IC803B is inverted from +5V to -5V, thus transmitting the arrival of the marker signals to the microcomputer.
After detecting the marker signals, the microcomputer chekcs their pattern to discriminate the test signals, thereby preventing faulty operation due to external noise and ensuring accurate signal location.

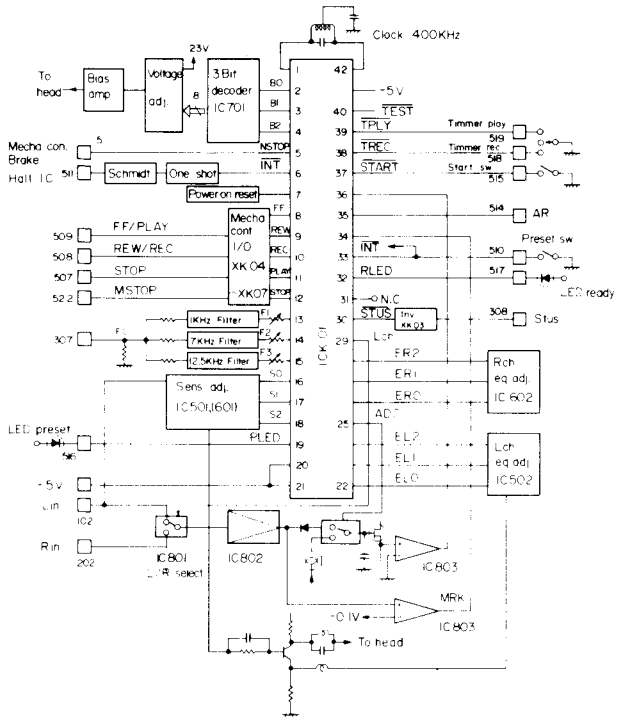

Fig. 11

5. Microcomputer

In the KD-A66, the tuning function is controlled by the 42-pin LSI microcomputer which stores instructions of about 2000 steps and processes normal instructions at 10 msec. The connection diagram is shown in Fig. 11. In addition, its incorporated timer controls the timing of the entire deck. The process is performed in the P-channel MOSFET and the output is used in the form of an open drain type pull-down.

The clock circuit stably operates because it consists of an LC resonance circuit. Since the microcomputer is provided with an interruption function, the pulse from the tape counter is counted with interruption.

6. Auto-stop

The rotation pulse signal from the Hall IC is waveform rectified and differentiated at its leading and trailing edges. Then, the monostable multiple circuit generates a pulse of about 20 msec which is in turn applied to the interrupt terminal $\overline{INT}$ of the microcomputer.

The microcomputer detects the tape position by the rotation pulse signal and also generates an auto-stop signal if no signal is applied for 1.5 sec or more.

7. Auto-rewind circuit

In the KD-A66, when an auto-stop signal is emitted from the microcomputer (ICK01) at the tape end during playback or record, the tape is automatically rewound to the beginning and the deck enters the PLAY or STOP mode by switching the MEMORY switch (SW55).

If the tape counter displays "999" halfway, since the deck also enters the PLAY or STOP mode, the data in the tape can be repeatedly reproduced between "0" and "999". To describe this operation, the MEMORY switch (SW55) is set in the PLAY mode. AT first, when an auto-stop signal is emitted from the microcomputer at the tape end during playback, transistor XK06 goes on, thus lowering the voltage at the auto terminal (pin 5) of mechanism control IC51. At this time, the auto-rewind instruction is emitted from IC51.

When the tape is rewound to the beginning by this instruction, the auto-stop instruction is emitted from pin 12 of the microcomputer. Likewise, when the voltage at the AUTO terminal (pin 5) of IC51 is lowered, the PLAY instruction is automatically emitted from the microcomputer.

Next, to describe this operation, the MEMORY switch is set in the STOP mode. At first, when an auto-stop signal is emitted from the microcomputer at the tape end during playback, transistor XK06 goes on, thus lowering the voltage at the said AUTO terminal. At this time, the auto-rewind instruction is emitted from IC51. When the tape is rewound to the beginning by this instruction, the auto-stop instruction is emitted from pin 12 of the microcomputer. However, since the base voltage of tansistor X63 is kept to about 1V during the REW instruciton, the emitter voltage of transistor X63 is lowered to 0.2V when transistor XK06 goes on. At the same time, transistor X63 goes on and functions to pull the STOP terminal (pin 1) of IC51, thus entering the deck into the STOP mode.

In addition, with the MEMORY switch in the OFF state, the auto-stop signal from the microcomputer, when transistor XK06 goes on, passes across diode D63 and also functions to pull the STOP terminal (pin 1) of IC51, thus entering the deck into the STOP mode.

Since the MEMORY STOP/PLAY function can be performed even during the auto-rewind operation by the auto-rewind circuit, the data in the tape can be repeatedly reproduced between "999" in the tape counter and the tape end.

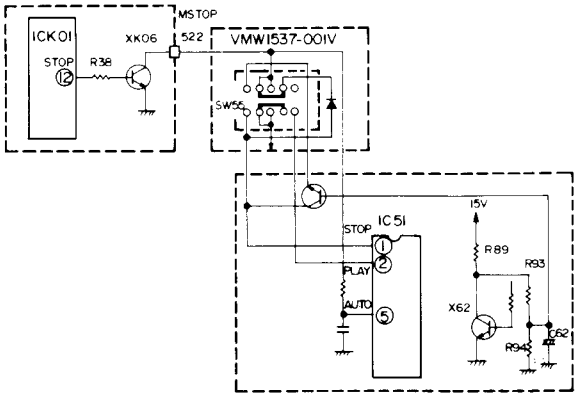

Fig. 12

Maintenance

To get long, trouble-free service, maintenance is important. Do not forget cleaning and demagnetizing.

Cleaning
After long use, the heads and tape part – capstan, pinch roller, etc. – will become dirty with dust or magnetic particles. Dirty heads cause imperfect erasing or high frequency drop-off. A dirty capstan and pinch roller will cause unstable tape speed, leading to increased wow and flutter. Always keep them clean by following the procedure below.

1. Heads
1) Push Eject button to open the cassette holder.
2) Use the head cleaning stick-provided to wipe the surface where the tape comes into contact with the head. (It is effective to moisten the cotton with alcohol.)

2. Pinch roller and capstan
Do the same method as heads.

3. Cabinet
When the cabinet becomes dirty, wipe it with a soft cloth soaked with a neutral cleaning solution of a polishing cloth.
* Do not use thinner or benzine.

Demagnetizing
The heads are made from a material resistant to magnetization but after long use they may become magnetized.
A magnet brought into their vicinity can magnetize the heads, causing excess noise. If noise seems to have increased, demagnetize the heads with a head demagnetizer through the following procedure.

1. Turn the POWER switch OFF.
2. Wrap the tip of the demagnetizer with vinyl tape or soft cloth so as not to damage the head surface. Switch on the demagnetizer and bring it close to the head.
3. Move the tip of the demagnetizer slowly first to the left and right, then up and down in front of the head. Gradually move it away from the head and switch it off at a distance of more than 30 cm (12").
4. The erase head need not be demagnetized. The capstan shaft and tape guide should be demagnetized in the same way as the record/playback head.

* Do not bring a magnetized metallic object (a screwdriver, for example) near the head as this will increase noise.

Removal of the Main Parts

Observe care in handling the parts since the parts are small in size and the distance between them are short due to a deck design aimed mainly at compactness and high performance.

ENCLOSURE ASSEMBLY PARTS

- Cassette door . . . .Depress the EJECT button to open the cassette door
  Slide off the cassette door upwards (about 5 mm) to unlock its pawls of both sides.
  Remove the cassette door forward.

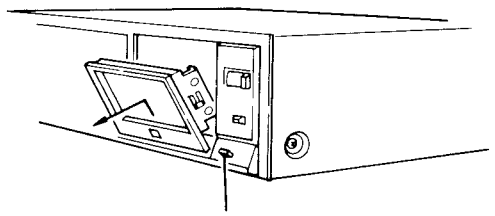

Fig. 13

- Top cover . . . . . .Remove 4 screws fastening the top cover.
- Control knobs (INPUT LEVEL, OUTPUT LEVEL) and Lever Knobs (ANRS, TAPE SELECT)
  . . . . . .Pull off them forward.

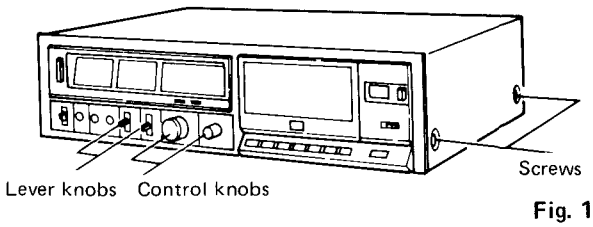

Fig. 14

- Bottom cover . . . .Remove 5 screws fastening the bottom cover.
- Mecha. control switches assembly .....
  (When adjusting or replacing REC/PB heads or Erase head)
  Remove 3 screws positioned below the mecha. control switches (on the bottom of the deck) and pull the control section forwards – no need of removing the front panel assembly.
- Front plate assembly .....
  1) Remove a screw fastening the bracket to mechanical assembly.

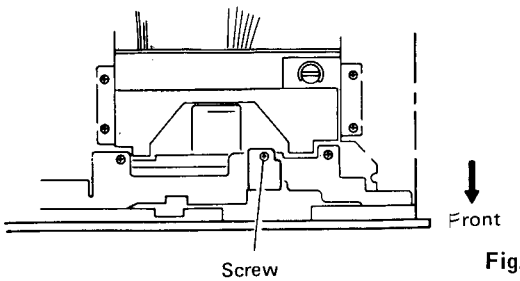

Fig. 15

2) Remove 4 screws (3 screws on upper side and a screw on bottom side.) fastening the front plate assembly.

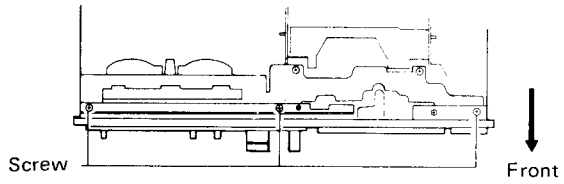

(Top View)

Fig. 16

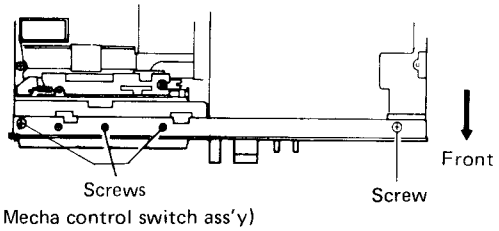

(for Mecha control switch ass'y)

(Bottom View)

Fig. 17

ELECTRICAL PARTS

- Mechanical control P.W. board assembly .....
  Remove a screw fastening mecha control P.W. board after removed the mechanical assembly.
- Main amp P.W. board assembly .....
  1) Remove 2 screws fastening the lever switches (ANRS, TAPE SELECT)
  2) Remove 2 washers and 2 nuts fastening variable resistors for INPUT LEVEL and OUTPUT LEVEL.

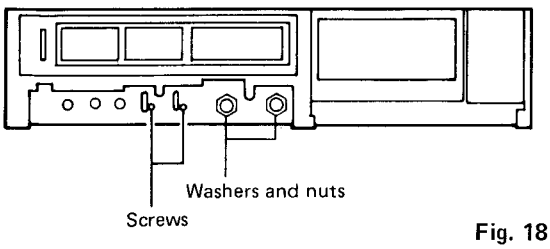

Fig. 18

3) Remove 4 screws fastening the main amp P.W. board. (on bottom side)

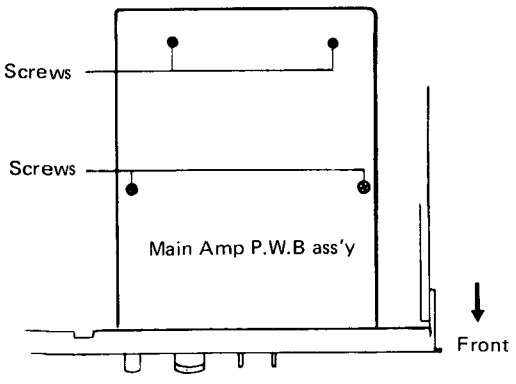

Fig. 19

- Computer P.W. board assembly
  1) Remove 3 screws fastening the Computer P.W. Board
  2) Remove the pawl (P.W.B holder) and open the computer P.W. Board on the front side.

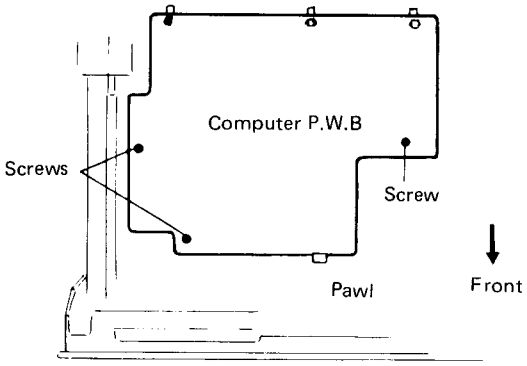

(Top View)

Fig. 20

MECHANICAL ASSEMBLY

1. Remove a screw fastening the bracket of mechanical ass'y. (See Fig. 15 of page 10)
2. Remove 2 screws ① fastening the front bracket. (upper side)
3. Remove a screw ② fastening the front bracket. (right side)
4. Remove 4 screws ③ fastening the amp chassis. (2 screws each)
5. Pull out the mechanical assembly to rear side, pushing the shift arm from upper side. (holding the shift lever tip to upper side for not touch it to the counter belt.)

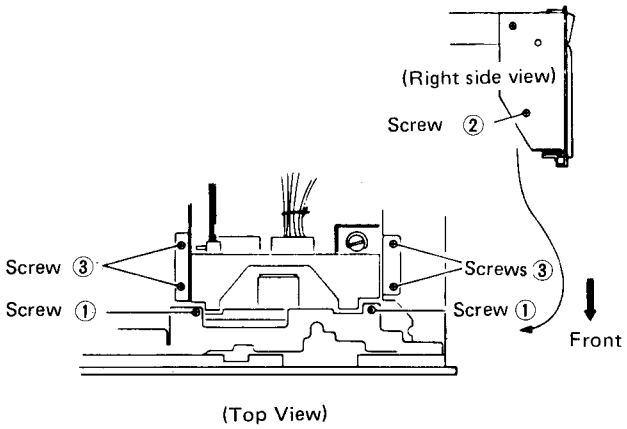

(Top View)

Fig. 21

Note:

When assembly the mechanical ass'y ..... Insert the mechanical ass'y to front bracket from rear side, pushing the shift arm from upper side (holding the shift lever tip to upper side) and sliding the mechanical ass'y on the amp chassis, and then, fasten each screws in the same method as at removing, after to check the shift lever tip position to front of the eject bracket.

When fastening the shift arm, push the eject button to check the switch (left side of shift arm) operation.

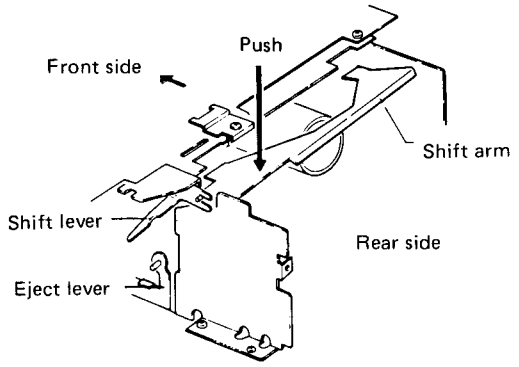

Fig. 22

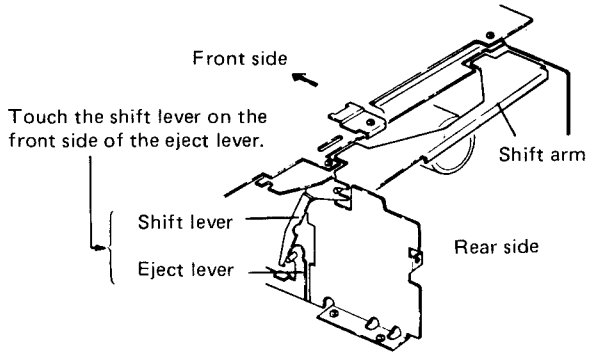

Fig. 23

MECHANICAL PARTS

1. REC/PB head .....
   Remove a screw ① .
   Work loose a screw ② for adjustment.
2. Erase head .....
   Remove a screw ③ .
   Remove a screw ④ for adjustment.
3. Pinch roller arm ass'y .....
   Remove an E-ring ⑤ holding its assembly.
   Pull it off from the shaft.
4. Supply reel disc .....
   Pull out the reel disc stopper ⑥ and pull out its disc from shaft.
5. Take-up reel disc .....
   Pull out the reel disc stopper ⑦ and remove the counter belt, pull out its disc from shaft.

Note:

(1) Remove the reel disc stoppers with a piece of sheet metal inserted between the reel disc and stopper, when assembling the reel disc, the stopper need a new parts (the stopper cannot use again).
(2) Be careful not to stain the counter belt.

7. Reel motor .....
   Remove 3 screws ⑧ fastening the reel motor.
8. Capstan motor .....
   1) Remove a screw ⑨ fastening the rubber stopper.
   2) Remove the capstan belt from the motor pulley.
   3) To remove the motor, turn it in counterclockwise direction and pull it out backward (with 3 cushions and 3 screws for fastening the motor).

Note:

When replacing the motor, check the following points.
(1) Is the motor placed in correct position?
(Don't make the motor's position deflective.)
(2) Does the capstan belt run in the center of the motor pulley?

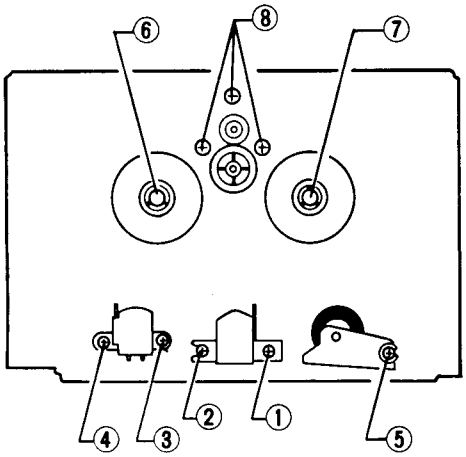

(Top View)

Fig. 24

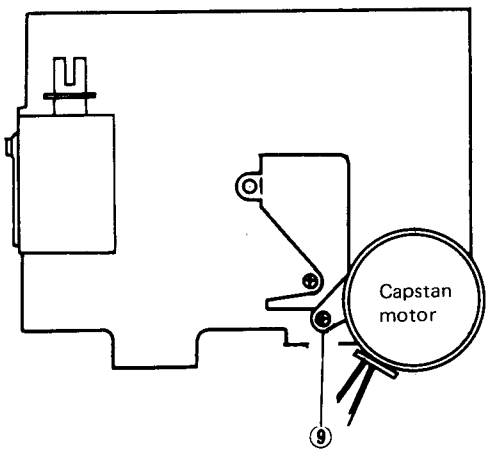

(Rear View)

Fig. 25

Main Adjustments

[I] Equipment and measuring instruments used for adjustment

1. Electrical adjustment

1) Electronic voltmeter
2) Audio frequency oscillator
   (range: 50—20 kHz and output 0 dB with impedance 600Ω)
3) Attenuator
4) Standard tapes for REC/PB
   Maxell UD — SF tape
   TDK SA — SA tape
   SCOTCH METAFINE — Metal tape
   } or equivalent
5) Reference tapes for playback (JVC Test Tape)
   VTT-658 (for head azimuth adj.)
   VTT-656 (for motor speed, wow flutter adj.)
   VTT-664 (for Reference Level 1 kHz)
   VTT-675N (for playback frequency response)
6) Resistors
   100Ω (for measurement of the bias current)
   600Ω (for attenuator matching)

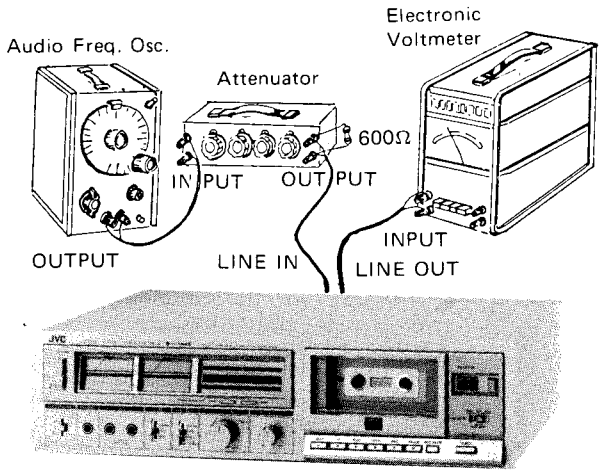

KD-A66

2. Mechanical adjustment

1) Gauge for checking the head position.
2) Torque gauge
3) Blank tape (C-120) for tape running checker.

[II] Adjustment and repair of the mechanism

TROUBLESHOOTING HINTS

1. Azimuth adjustment and head replacement

1) Remove the wires of the control switches from the wire clamps after having removed the top cover.
2) Remove 3 screws positioned below the control switches (on the bottom of the deck) and pull the control section forwards.
3) With the control section pulled out, azimuth adjustment and/or head replacement can be performed.
   With the JVC cassette deck series of KD-A6, KD-A5 and KD-A8 models, the adjustment of replacement can be performed more easily than with conventional cassette decks which require removal of the entire mechanical section for the adjustments and/or replacements.

2. Tape-to-head contact adjustment

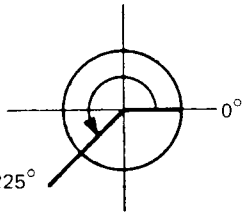

1) Turn the adjusting screw for aligning the erase head until it stops. Then, turn the screw in the reverse direction by 225° (a 5/8 revolution).
2) Check the tape-to-head contact using a C-120 tape having pads.
3) Check it again with a Metal tape.
   Checking method:
   Record a 400 Hz or 1 kHz signal with 0 VU + 20 dB. Erase the recording. Checking if the erasing is satisfactorily performed.
4) After adjustment, apply screw bond on the adjusting screw to prevent its loosening.

(Adjust the mechanism or confirm that it is in normal operating condition prior to the adjustment of the electrical circuit.)

Item	Adjustment	Adjusting point	Standard value	Remarks
Adjusting record/playback head position 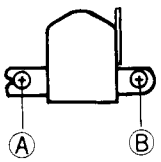	1. Connect an electronic voltmeter to the LINE OUT terminals. 2. Playback the VTT-658 test tape. 3. Adjsut the head angle with the screw Ⓐ until the reading of the electronic voltmeter becomes maximum for both channels. 4. After adjusting, set the screw with screw bond.	Screw Ⓐ	Maximum	If the head is worn, disconnected or exceedingly magnetized so as not to provide the necessary characteristics, replace it with a new one. After replacement, the head position adjustment as well as the playback level adjustment, the bias current adjustment and the recording level adjustment are all necessary. If the output difference between the left and right channels exceeds 3—4 dB, the head is defective. Replace it with a new one.

Item	Adjustment	Adjusting point	Standard value	Remarks
Adjusting erase head height 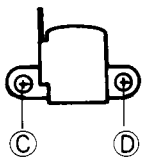	Employ a special cassette (C-120) from which parts of the casing, where the erase head, record/playback head and capstan engage, has been cut away. Perform tape transport with the cassette tape. Adjust the screw Ⓒ until the tape runs in the center of the erase head tape guide. (See "Troubleshooting hints" aforesaid.) 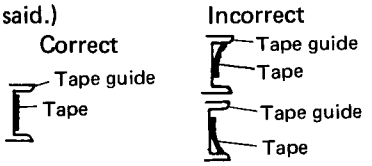	Screw Ⓒ		Be sure to perform this adjustment after replacing the erase head.
Adjusting motor speed	Connect a speed meter (an electronic counter) to the LINE OUT terminals. Playback the VTT-656 test tape. Adjust the semi-fixed resistor in the motor until the reading of the speed meter is 3000 Hz.	Semi-fixed resistor in the motor	3000 Hz	If the speed meter functions as a wow and flutter meter, also, connect the deck to the INPUT terminals of the meter.
Checking playback torque	Employ a torque testing cassette tape for the checking, or remove the cassette cover and use a torque gauge.		40—70 gr-cm	If the standard torque is not obtained, replace the take-up disc assembly.
Checking fast forward torque	Measure the torque in the fast forward mode in the same manner as in the above.		More than 70gr-cm	If the standard torque is not obtained, perform the following. 1. Clean the capstan belt, the idler circumference, the motor pulley, the take-up reel disc circumference, the flywheel circumference, etc. 2. Replace the belt and idler.
Checking rewind torque	Measure the torque in the rewind mode in the same manner as in the above.		More than 70gr-cm	If the standard torque is not obtained, clean the capstan belt, idler, motor pulley, flywheel circumference, rewinding idler circumference, left reel disc circumference, etc.
Checking wow and flutter	Connect a wow and flutter meter to LINE OUT terminals. Playback the VTT-656 test tape. Check to see if the reading of the meter is within 0.05% (WRMS).			If the reading becomes moving value even if conforming to the standard, a re-claim may be raised. Repairs are necessary.

[III] Repair of wow flutter

If wow and flutter increase, check the following points. If there is defect in revolving parts, the wow and flutter generated will increase in proportion to the number of revolutions.
Play a 300 Hz test tape, and defective part can be detected from the sound.

Section	Trouble	Repair
Capstan and flywheel	Capstan shaft has excessive run-out. Flywheel turns heavily. (shaft seisure, thrust play, etc.)	Replace flywheel. Clean the capstan shaft and the groove in the flywheel. Apply oil to the metal position. Replace the capstan assembly.
Pinch roller	Rough rotation (Deformation scratches, or dust) The angular position of the pinch roller is not correct. The pinch roller pressure is not correct.	Replace pinch roller, or pinch roller spring. Clean the pinch roller or apply oil to the rotary shaft. Adjust the pinch roller so that it is parallel with the capstan shaft. Replace the pinch roller spring.
Belt	Belt has undue run-out. Belt is dirty or slippery.	Clean the belt. Replace the belt.
Back tension	Back tension is irregular, or back tension is too strong.	Replace back tension spring (under supply disc).
Motor	Motor shaft has undue run-out. Motor pulley is oily and dusty.	Replace the motor. Clean the motor pulley.

[IV] Electrical adjustment location

Main Amp P.W. Board

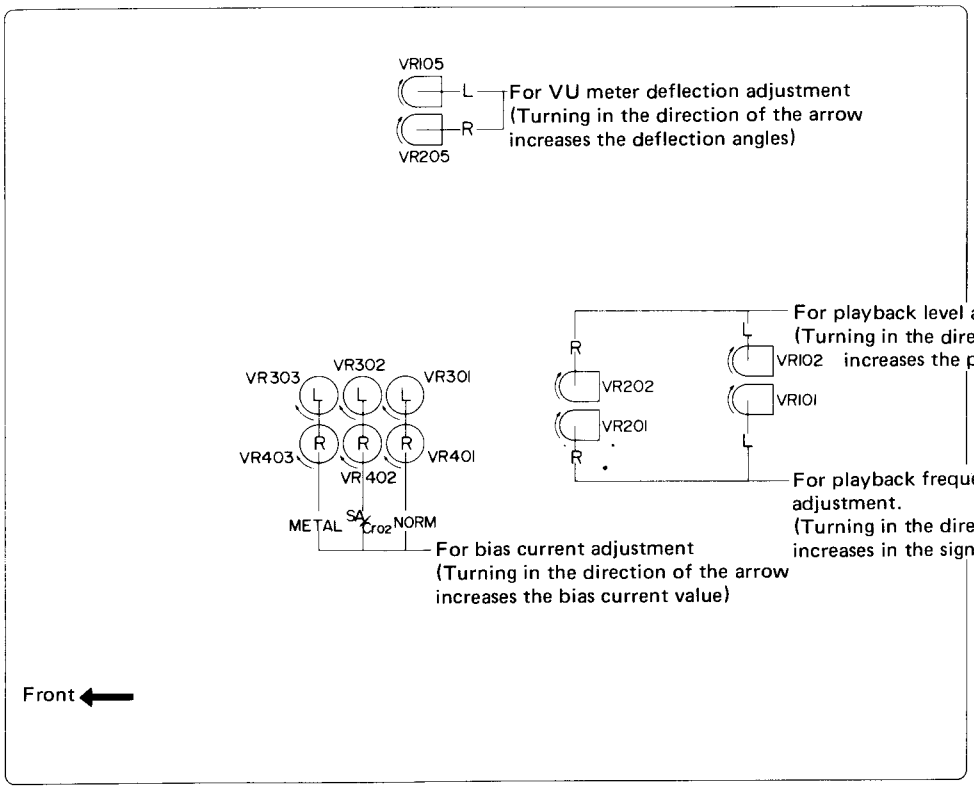

[V] Electrical circuit adjustment procedure

In th steps marked by an asterisk (*), adjustment should be performed, however, only checking is sufficient with steps other than those.

Adjustment should be performed in the order of steps 1,2, 3, ... Perform this adjustment with the ANRS switch set to OFF and output level control set to maximum.

Step	Item	Adjustment	Adjusting point	Standard value	Remarks
1*	Adjusting playback level	1. Play back the VTT-664 Reference tape (1 kHz) with the tape select switch set to the SF/NORM position. 2. Adjust VR102 and VR202 until the LINE OUT becomes about −4 dBs.	VR102, 202	−4 dBs (0.5V)	This adjustment becomes necessary when a change in playback level results (for example, due to head replacement).
2*	Playback frequency response	Playback test tape VTT-675N (1 kHz, 10 kHz) for following adjustment. 1) Adjsut VR101 and VR201 so that 10 kHz signal and 1 kHz signal gains become flat response.	VR101, 201	Reference frequency lkHz 0±2dB at 10kHz	
3*	Adjusting VU meter deflection	1. Set the cassette deck to its recording mode. 2. Apply a 1 kHz, approx. −10 dBs signal to the LINE IN terminals. 3. Adjust the recording level controls until the signal is available at −4 dBs at the LINE OUT terminals. 4. Adjust VR105 and VR205 until the VU meters deflect to 0.	VR105, 205	0 VU	Perform the adjustment when the parts are replaced.
4*	Checking record/ playback frequency response	Record 1 kHz, 50 Hz and 12.5 kHz signals at an input level of 0 VU to −20 dB. Playback the tape. Check to see that the 50 Hz and 12.5 kHz singal output deviations fall within the standard range, using the 1 kHz singal output as a reference.	For SF/ NORM tape; VR301, 401 For SA/ CrO2 tape; VR302, 402 For Metal tape; VR303, 403	Reference frequency; 1 kHz 0 ± 3 dB at 50 Hz 0 ± 3 dB at 12.5 kHz	This checking should be performed for normal, chrome and metal tapes and for both right and left channels. 1. Bias current adjustment for a cassette deck should generally be performed referring to the record/playback frequency response. This is because the frequency response of a cassette deck depends more greatly upon the bias current than does that of an open reel deck. The current measuring method described below is an alternative one. 2. If the bias current is not properly adjusted, the record and playback characteristics becomes as shown left.
5	Adjusting recording level	1. Apply a 1 kHz, approx. −10 dB Signal to the LINE IN terminals. Adjust the recording level controls until the signal is available at −4dBs at the LINE OUT termianls. 2. After checking to see if the VU meters become to 0, record the signal applied to both left and right channels using normal tape. 3. Play back the recording part. Perform the recording signal adjustment with VR501 and VR601 so that the VU meters become to 0.	VR501, 601	0 VU	The level difference between left and right channels for SF/ NORM tape, chrome tape and metal tape should be less than 1 dB (1 VU). Perform the adjustment usign a normal tape, level difference between recording and playback for SA/CrO2 and metal tapes, should be less than 1.5dB, and that between left and right channels shold also be less than 1 dB.

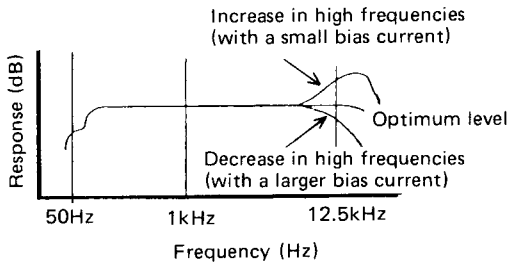

Step	Item	Adjustment	Adjusting point	Standard value	Remarks
6	Checking record/ playback distortion	1. Record a 1 kHz, –4 dBs signal to LINE IN terminals and perform recording with the VU meter becomes to 0. 2. Play back the recorded part. Check the output with a distortion meter to see if the value conforms to the standard value.		SF/NORM tape; Less than 2.5% SA/CrO2 tape; Less than 3% Metal tape; Less than 2%	Be sure to perform this adjustment following bias curret and recording level adjustments.
7	Checking signal to noise ratio in recording/ playback	1. Record a 1 kHz, 0 VU signal. Stop the input by disconnecting from the terminal to perform non-signal recording. 2. Playback the recorded part. Measure the 0 VU recording output and the non-signal recording output for comparison using an electronic voltmeter. Check to see if the value conforms to the standard value.		SF/NORM, SA/CrO2 and Metal tapes; More than 42 dB	Apply an output (–72 dBs) to the MIC terminals with the recording level controls set to maximum so that the VU meter becomes to 0.
8	Checking erasing coefficient	1. Apply a 1 kHz signal to the LINE IN terminals. Adjust the recording level controls until the VU meter becomes to 0. 2. Perform recording with the signal enhanced by 20 dB. 3. Erase a part of the recording. 4. Measure the output difference between the erased part and non-erased part to compare with an electronic voltmeter.		More than 65 dB	For the measuring, connect a band pass filter between the deck and the electronic voltmeter. 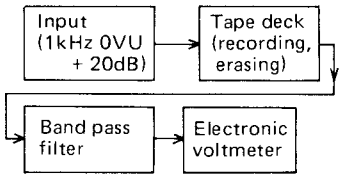

Computer P.W. Board

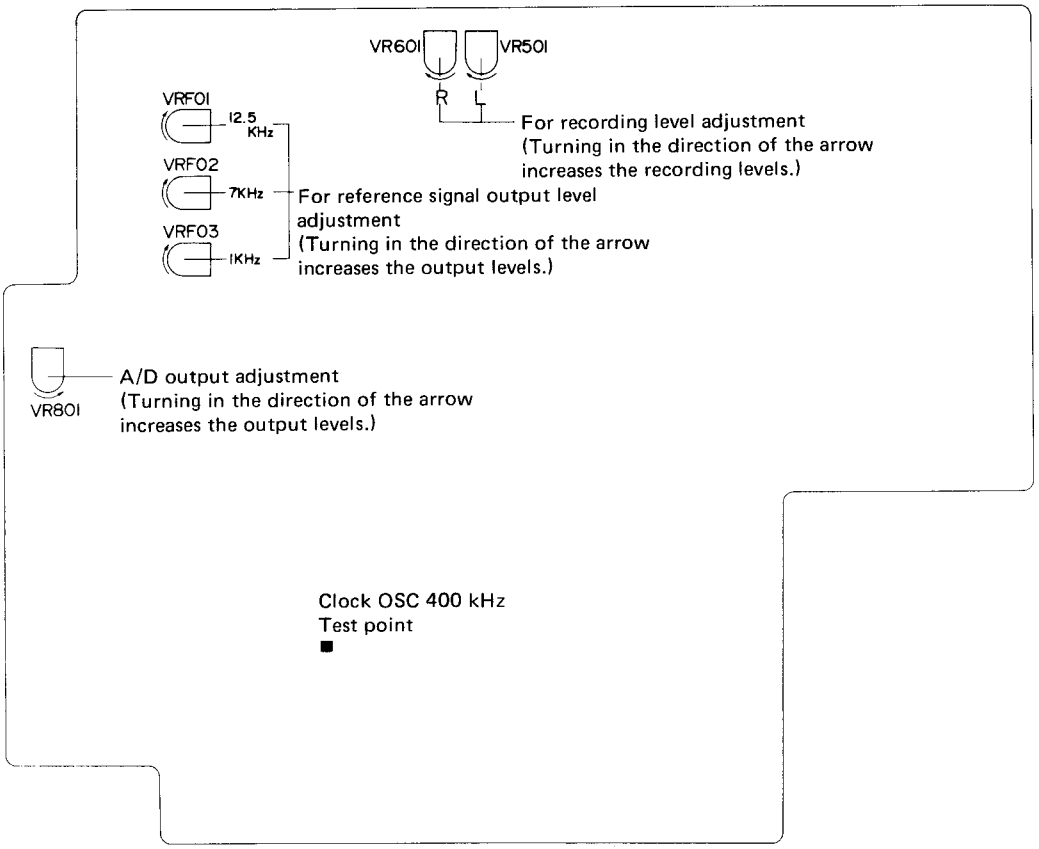

Adjustment by Computer Tester

Tester for KD-A8 plus Relaying Connection (Using the same quality assurance of the radio cassette recorder)

Step	Item	Adjusting method	Adjustment point (s)	Standard value (s)	Remarks
1	Computer clock	Adjust coil LK01 with a counter connected to CLI on the computer circuit board so that this clock pulse is 400 kHz.	LK01	400 kHz ±5 kHz	
2	Computer oscillation	1) Set the computer tester to the TEST and MANUAL modes. 2) Set the TEST MODE switch S3 of the computer tester ON, press the PRESET switch, then set the OPERATION switch to REC PAUSE. 3) Obtain the switchable output of 1 kHz–7 kHz–12.5 kHz by pressing the START switch. 4) With the switchable output set to I kHz, adjust VRF03 on the computer circuit board so that the input level is –37 dB. 5) With the switchable output set to 7 kHz adjust VRF02 on the computer circuit board so that the input level is –36.5 dB. 6) With the switchable output set to 12.5 kHz, adjust VRF0I on the computer circuit board so that the input level is –36.5 dB.	Computer circuit board 307 Test point VRF03 VRF02 VRF01	–37dB at 1kHz –36.5dB –36.5dB at 12.5kHz	Test program: 0

Step	Item	Adjusting method	Adjustment point (s)	Standard value (s)	Remarks
3	Analog/ digital regulation	1) Set the computer tester to the TEST and MANUAL modes, set the test program (TEST PRO) switch S3 to ON, then set both S4 and S5 to ON. 2) Press the PRESET switch, then set the OPERATION swtich to REC PAUSE. 3) Adjust VR801 so that "58" is displayed on the LEVEL DETECT indicator of the computer tester. 4) After the above Adjustment, confirm that the A/D conversion time is about 8 msec in the A/D converted waveform at test point TP.	VR801	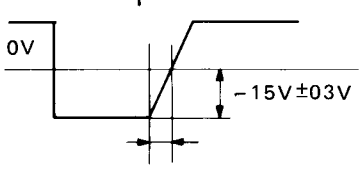 Approx. 8m sec	Test program: 3 (Test point: A/D)
4	Tape sensitivity regulation	1) Set the computer tester to the TEST and MANUAL modes, set the test program (TEST PRO) switch S3 to ON, then set the both S4 and S5 to ON. 2) Set the OPERATION switch to REC PAUSE, then draw out the post pin. 3) Set the test program swtich S1 to +5V and apply a 1 kHz signal to LINE IN Then, when the outut level of this signal at LINE OUT is set to 8 dB, it shall vary at test pins [105] and [205] on the computer circuit board as shown in the diagram below. Confirm that the output level increases in steps in the range of about −4 dB to +4 dB against the preset value. 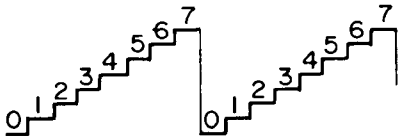			Test program switch: 3
5	Equalization level selection operation	1) Set the computer tester to the TEST and MANUAL modes, set the test program (TEST PRO) switch S3 to ON, then set S4 to ON. 2) Press the PRESET switch, set the OPERATION switch to REC PAUSE, then draw out post pin H and set S1 to +5V. 3) Apply a 10 kHz signal to LINE IN. Then, when the output level of this signal at LINE OUT is set to 8 dB, it shall vary as shown in the diagram below when measuring the signal current at the record/playback head. With a normal tape, confirm that the output level varies in the same increment in the range of about −4dB to +4dB. (10 kHz, steps 0 – 7) 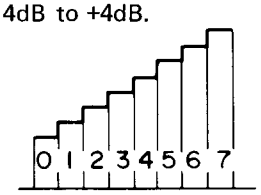			Test program: 2
6	Bias current regulation	1) Connect a 100Ω resistor between the blue wire of the record/playback head and the head terminal, then insert a recordable tape. 2) Set the frequency to 82 kHz ± 1 kHz by turning the oscillation coil L701 with the deck set in the REC/PLAY mode. 3) Raise the output to maximum by turning coil L702. 4) Reduce the bias current leakage at test points TP 201 and 101 ro less than −30 dB by coils L104 and L204. 5) Set the computer tester to the TEST and MANUAL modes, set the test program (TEST PRO) switch S3 to on, and set S5 to ON. Next, press the PRESET swtich, then set the deck to the REC/PLAY mode. Confirm that the bias current varies in the range of 10 to 30 R of the initial value.			Test program: 1

Block Diagram

Recording system

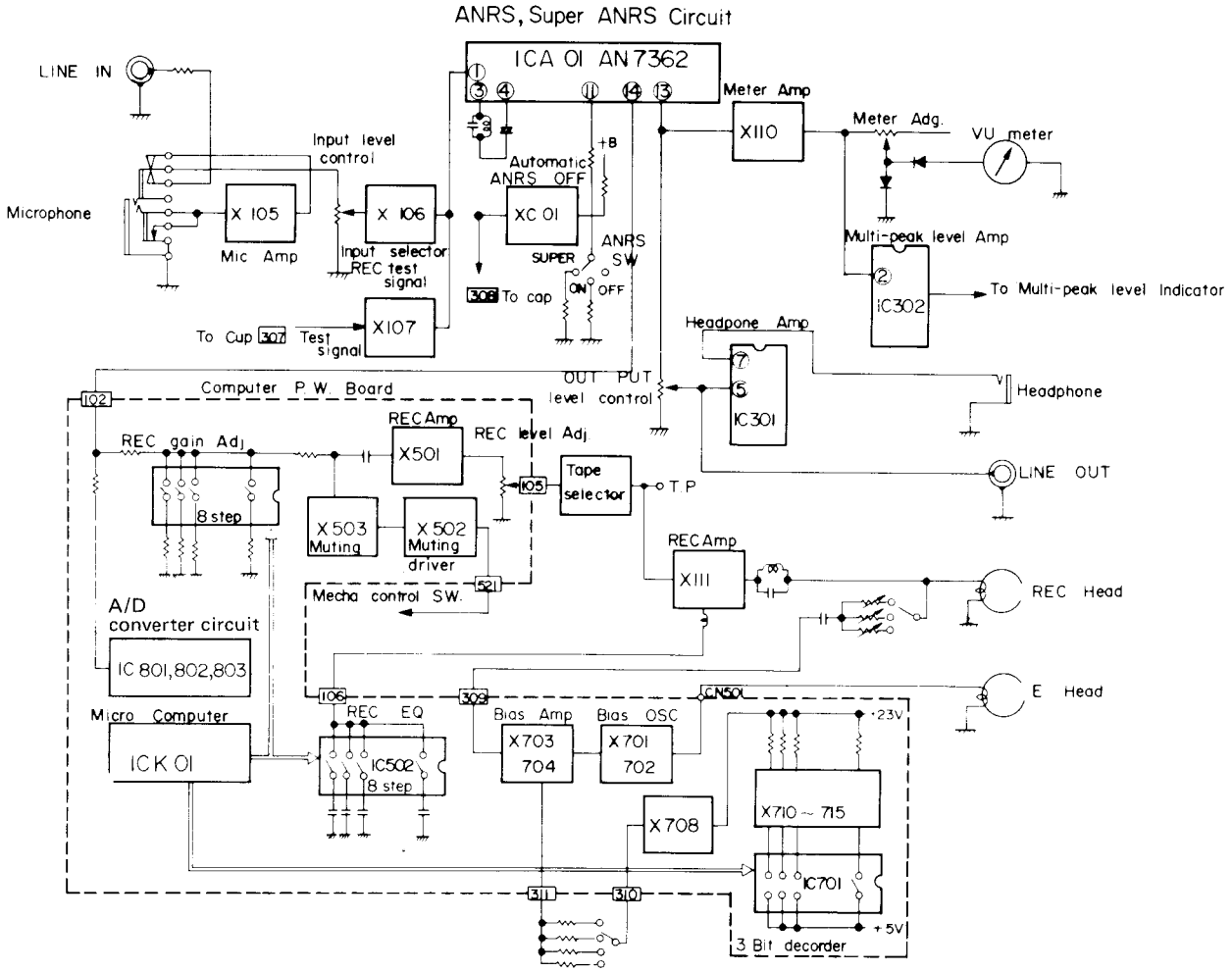

Playback system

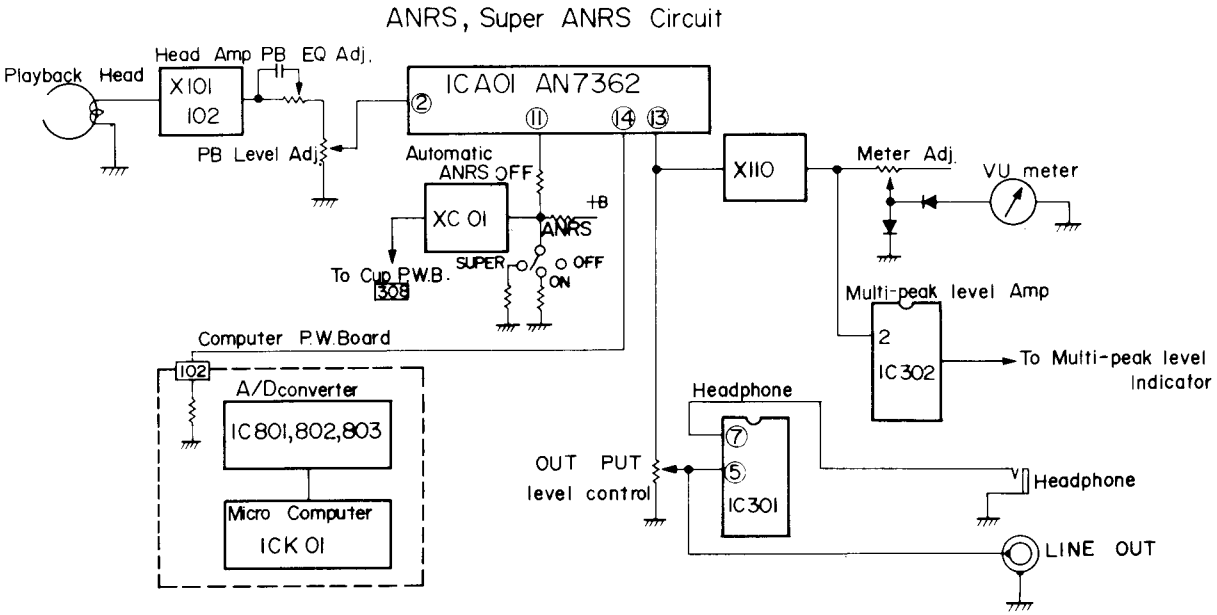

Mecha control circuit

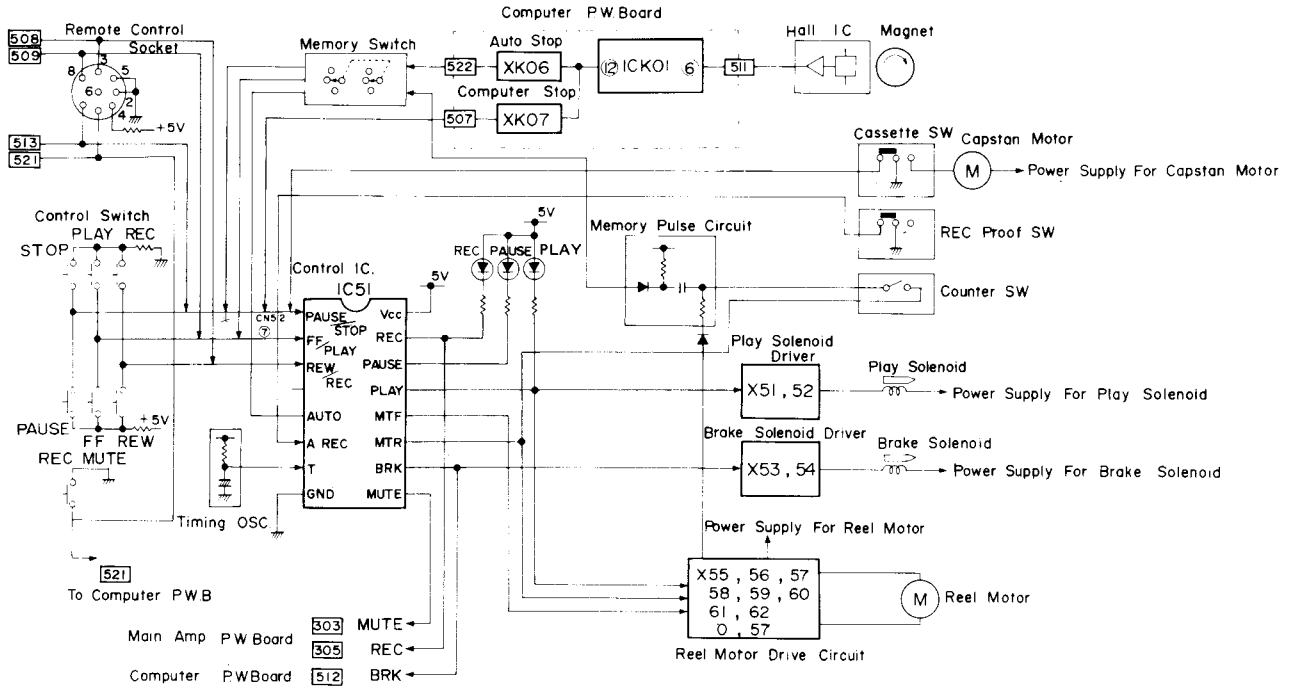

Computer circuit

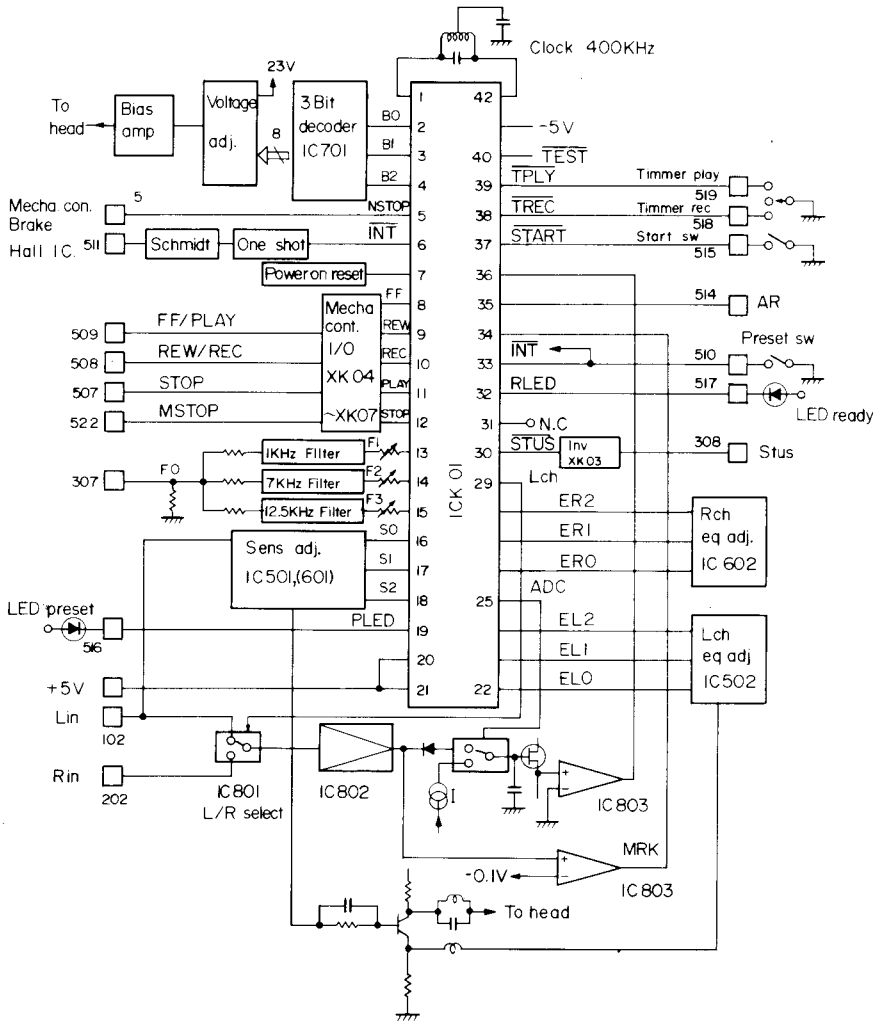

Instruction of ICs

UPC4557C

(Top view)

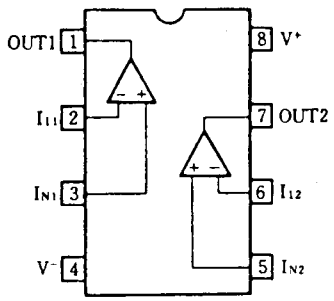

Equivalent circuit (1/2)

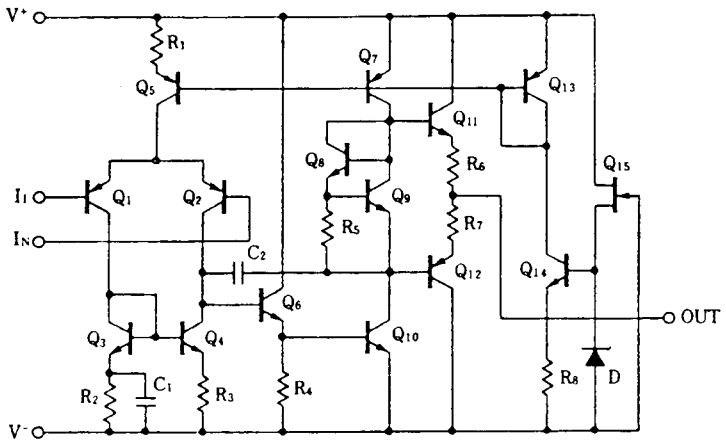

HD7400

(Top view)

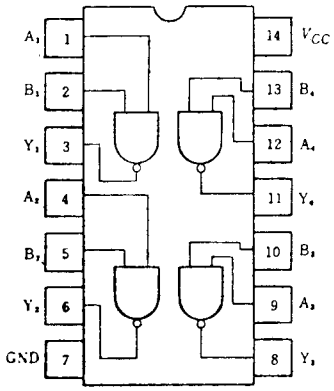

Equivalent circuit (1/4)

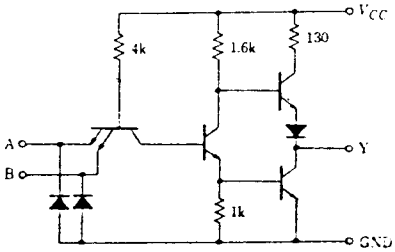

LBI436

(Top view)

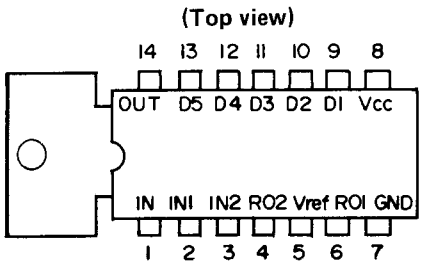

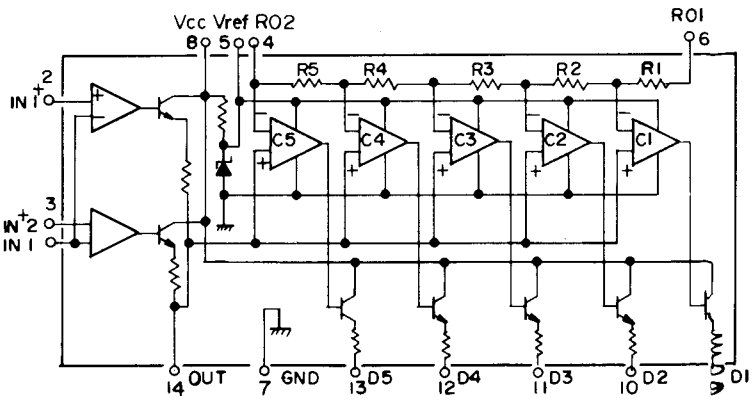

Standard Schematic Diagram of KD-A66

(Main amp circuit)

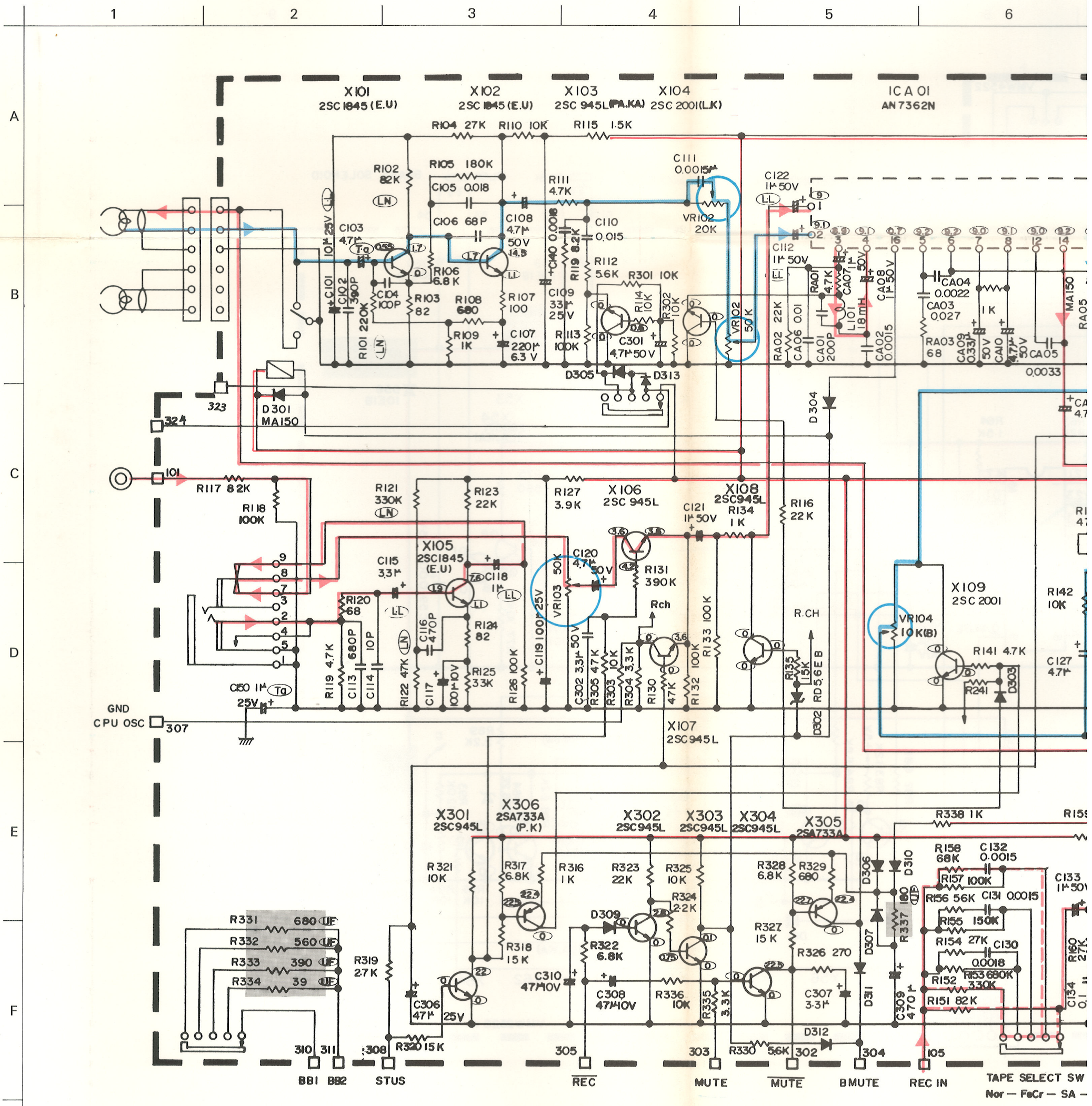

NOTES: 1. Unless otherwise specified, all resistors are 1/4W, ±5% carbon resistors.
And all capacitors are 50 V fixed ceramic capacitors or 50 V mylar capacitors.

2. UF — Unflammable carbon resistor
MF — Metal film resistor
OMF — Oxided metal film resistor
Ta — Tantalum solid electrolytic capacitor
LL — +20% low leak current electrolytic capacitor
PP — Polypropylene capacitor
PS — Polystyrene capacitor
MM — Metallized mylar capacitor
NP — Non-polarized electrolytic capacitor

3. Blue line shows the signal at playback.
Red line shows the signal at recording and +B circuits.

4. ▒▒ parts are safety assurance parts. When replacing those parts, make sure to use the specified one.

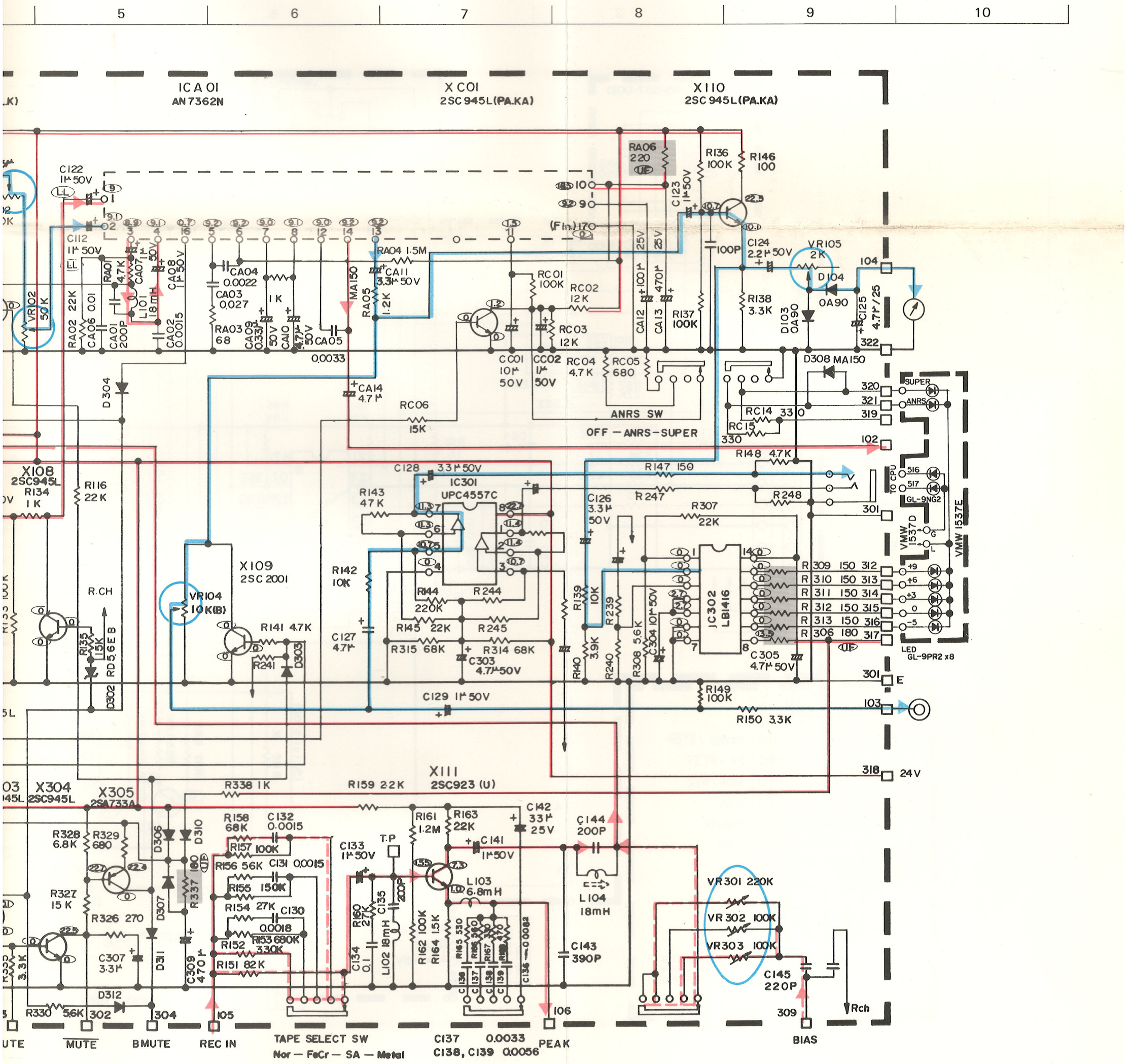

— Diode —

— Transistor —

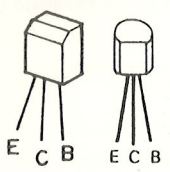

capacitor
acitor
r capacitor
electrolytic

e the specified one.

Standard Schematic Diagram of KD-A66

(Mechanical control circuit)

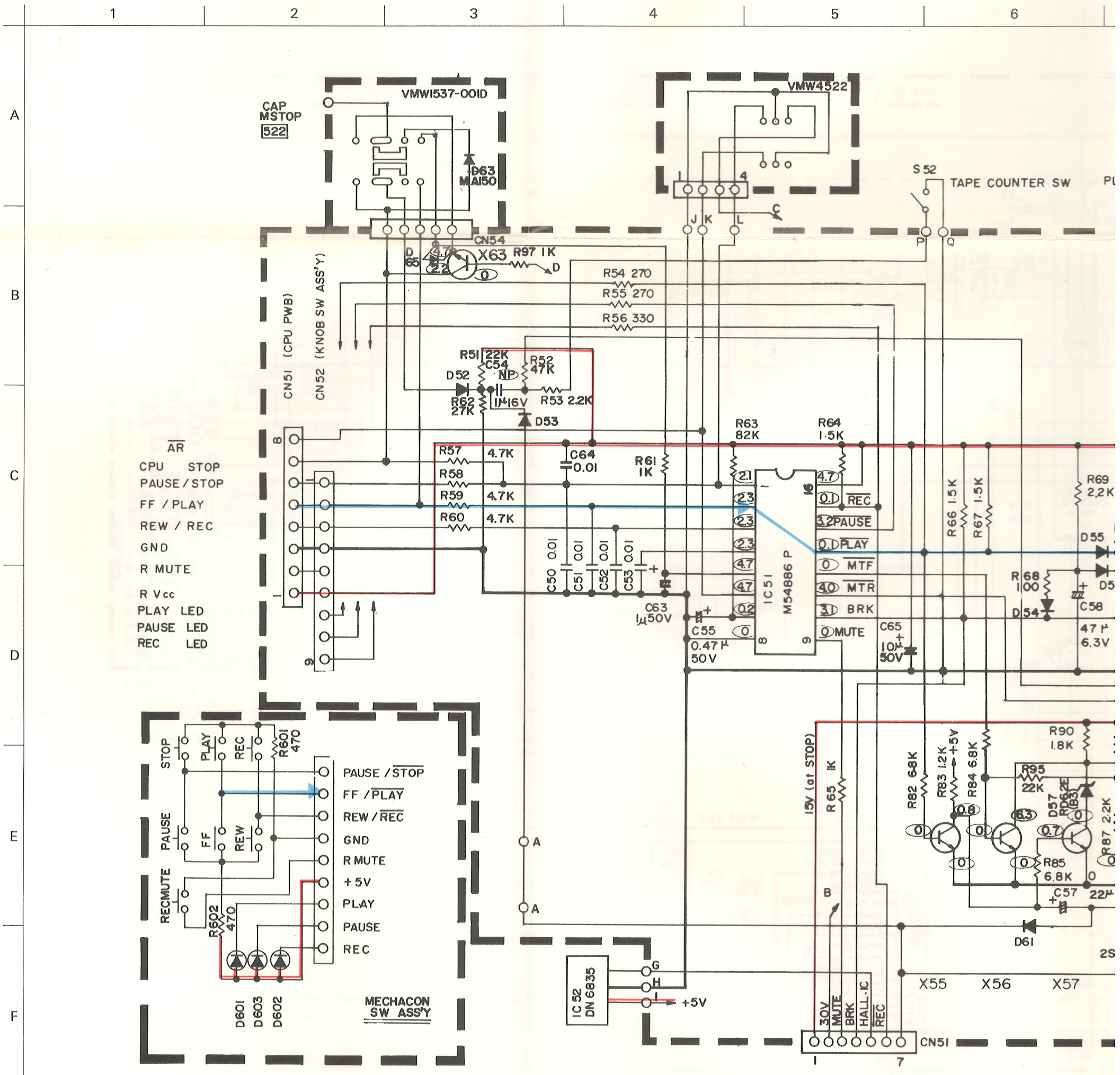

CN51	CONNECTION
1	317 (CPU PWB)
2	502 (CPU PWB)
3	303 (MAIN PWB)
4	512 (CPU PWB)
5	511 (CPU PWB)
6	305 (MAIN PWB)
7	308 (CPU PWB)

NOTES:

1. Unless otherwise specified, all resistors are 1/4W, ±5% carbon resistors.
   And all capacitors are 50 V fixed ceramic capacitors or 50 V mylar capacitors.
2. UF — Unflammable carbon resistor
   MF — Metal film resistor
   OMF — Oxided metal film resistor
   Ta — Tantalum solid electrolytic capacitor
   LL — +20% low leak current electrolytic capacitor
   PP — Polypropylene cap
   PS — Polystyrene capaci
   MM — Metallized mylar c
   NP — Non-polarized elec capacitor
3. Red lines show +B circuits. Blue line shows the signal a
4. [ ] parts are safety assur parts, make sure to use the

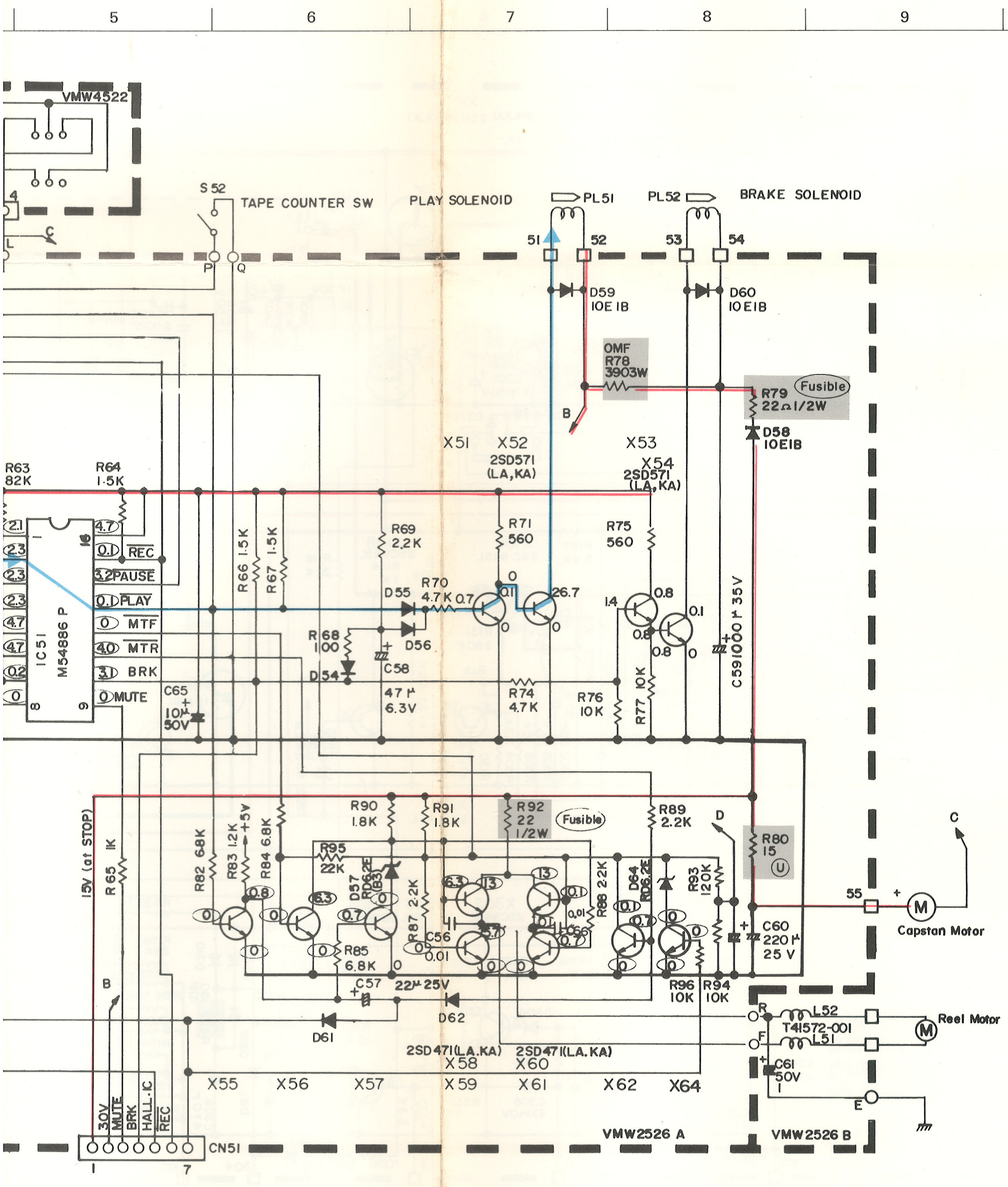

fied, all resistors are 1/4W, ±5%

50 V fixed ceramic capacitors or

carbon resistor
sistor
l film resistor
id electrolytic capacitor
k current electrolytic capacitor

PP — Polypropylene capacitor
PS — Polystyrene capacitor
MM — Metallized mylar capacitor
NP — Non-polarized electrolytic capacitor

3. Red lines show +B circuits.
Blue line shows the signal at playback.
4. ▒▒ parts are safety assurance parts. When replacing those parts, make sure to use the specified one.

— Diode —

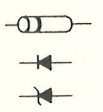

—Transistor—

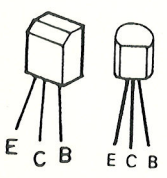

Standard Schematic Diagram of KD-A66

(Computer circuit)

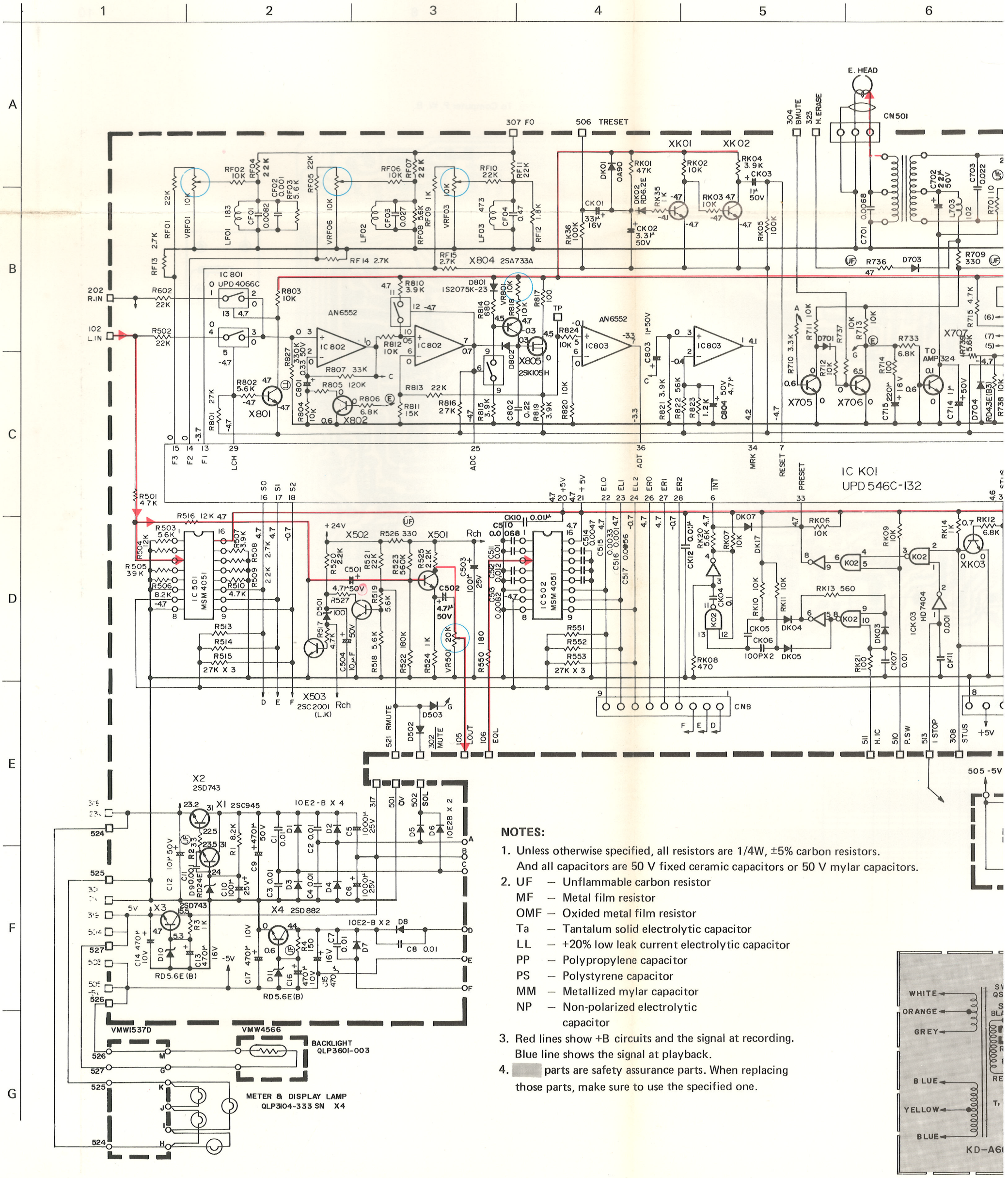

NOTES:

1. Unless otherwise specified, all resistors are 1/4W, ±5% carbon resistors.
   And all capacitors are 50 V fixed ceramic capacitors or 50 V mylar capacitors.
2. UF — Unflammable carbon resistor
   MF — Metal film resistor
   OMF — Oxided metal film resistor
   Ta — Tantalum solid electrolytic capacitor
   LL — +20% low leak current electrolytic capacitor
   PP — Polypropylene capacitor
   PS — Polystyrene capacitor
   MM — Metallized mylar capacitor
   NP — Non-polarized electrolytic capacitor
3. Red lines show +B circuits and the signal at recording.
   Blue line shows the signal at playback.
4. ▨ parts are safety assurance parts. When replacing those parts, make sure to use the specified one.

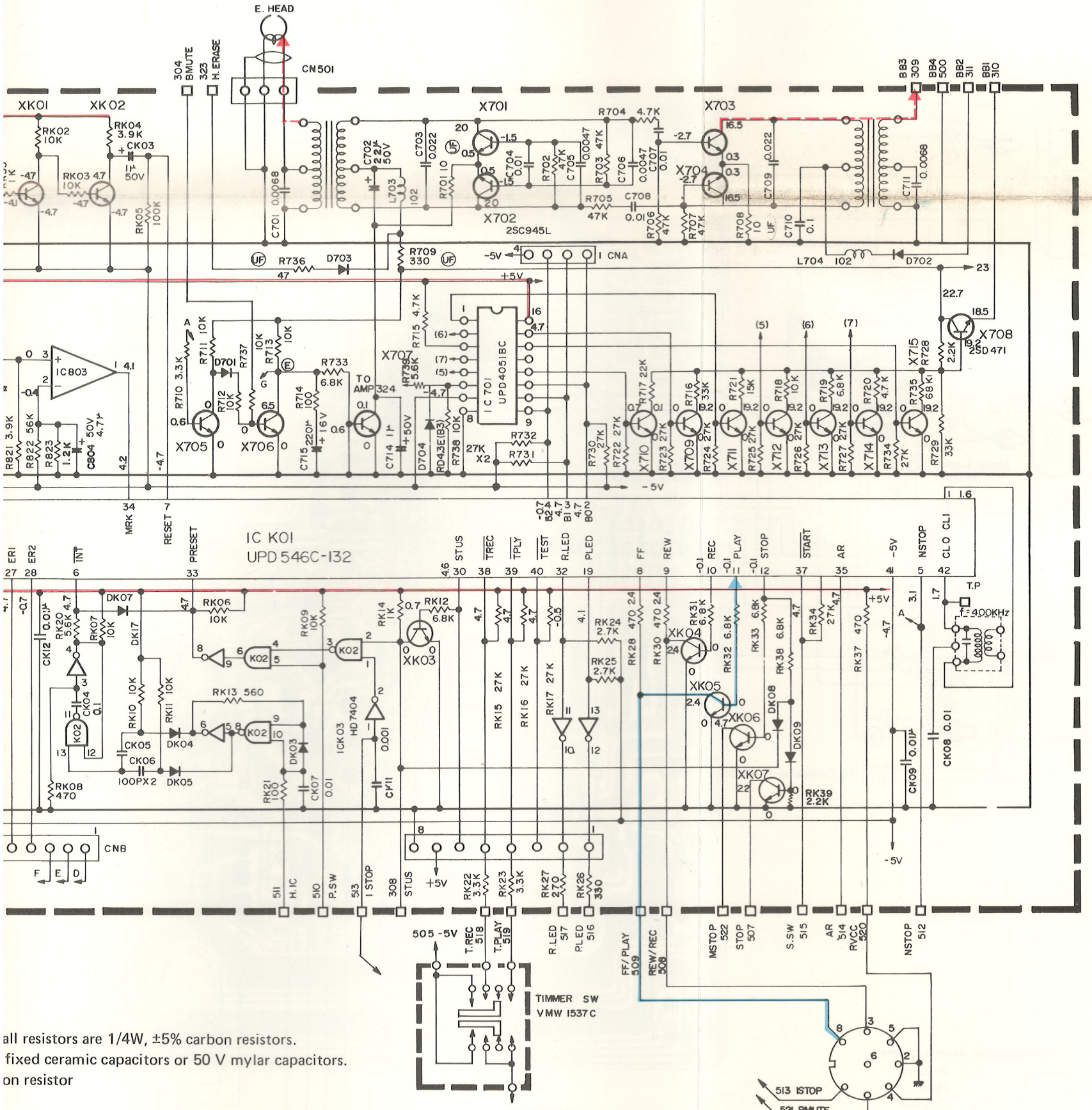

all resistors are 1/4W, ±5% carbon resistors.
fixed ceramic capacitors or 50 V mylar capacitors.
on resistor

resistor
ctrolytic capacitor
rent electrolytic capacitor
acitor
tor
apacitor
trolytic

and the signal at recording.
playback.
nce parts. When replacing
e the specified one.

REMOTE CONTROL SOCKET

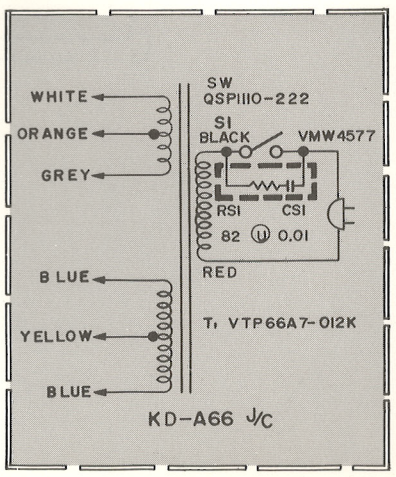

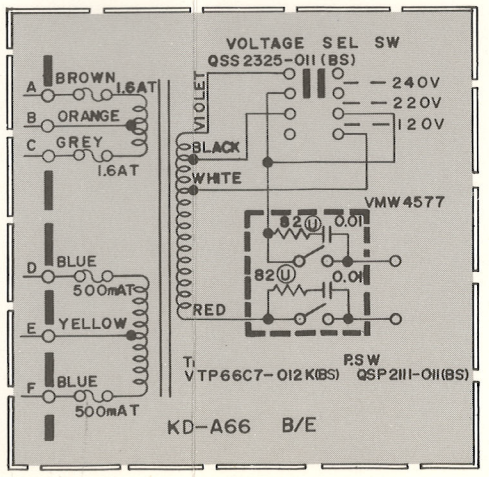

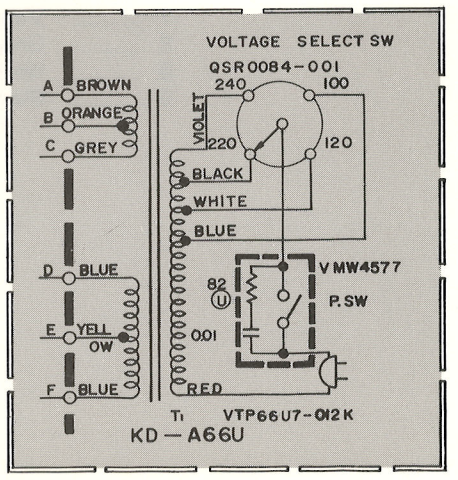

Wiring (1)

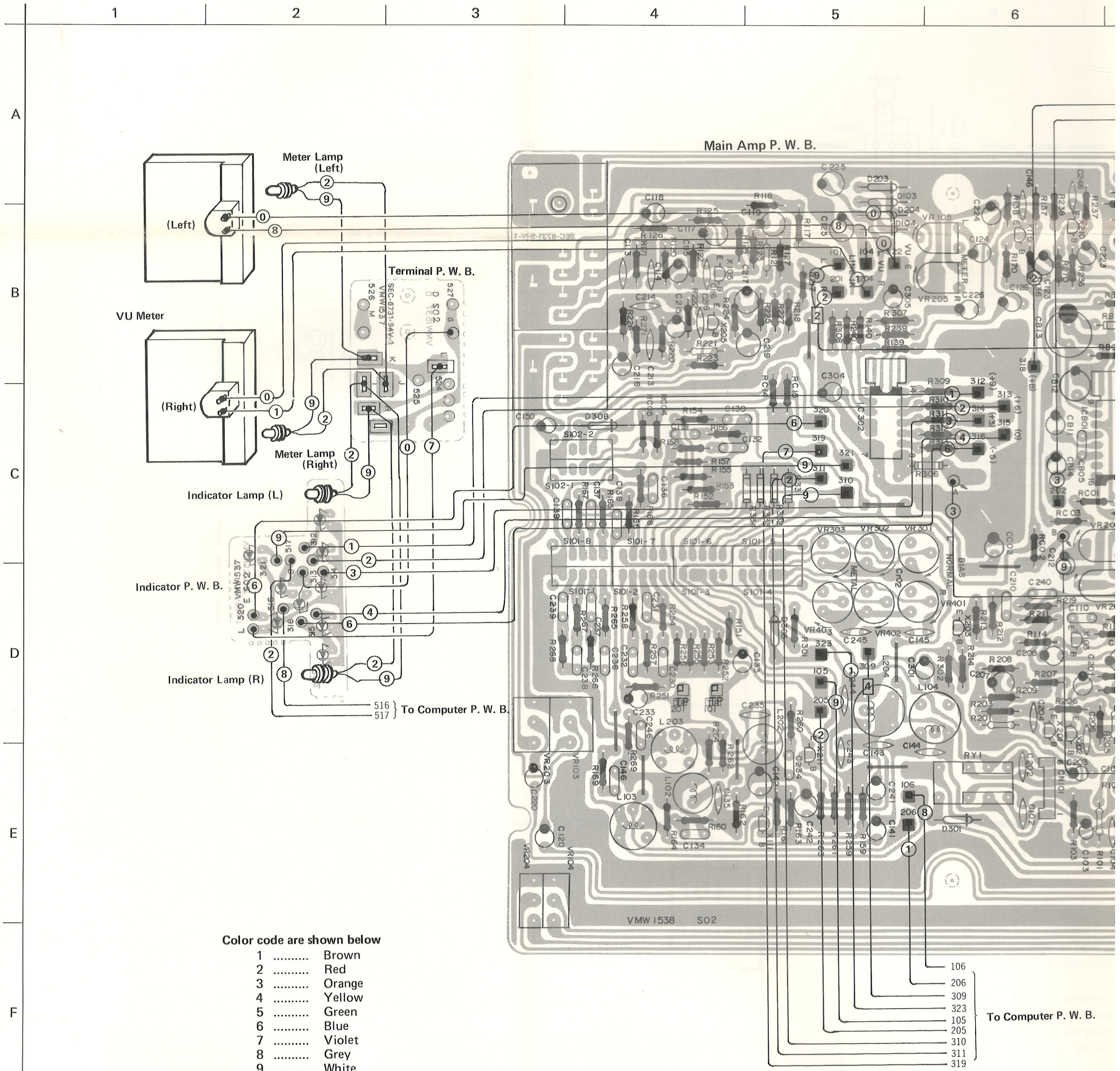

Color code are shown below

1	.....	Brown
2	.....	Red
3	.....	Orange
4	.....	Yellow
5	.....	Green
6	.....	Blue
7	.....	Violet
8	.....	Grey
9	.....	White
0	.....	Black

5 6 7 8 9 10

Amp P. W. B.

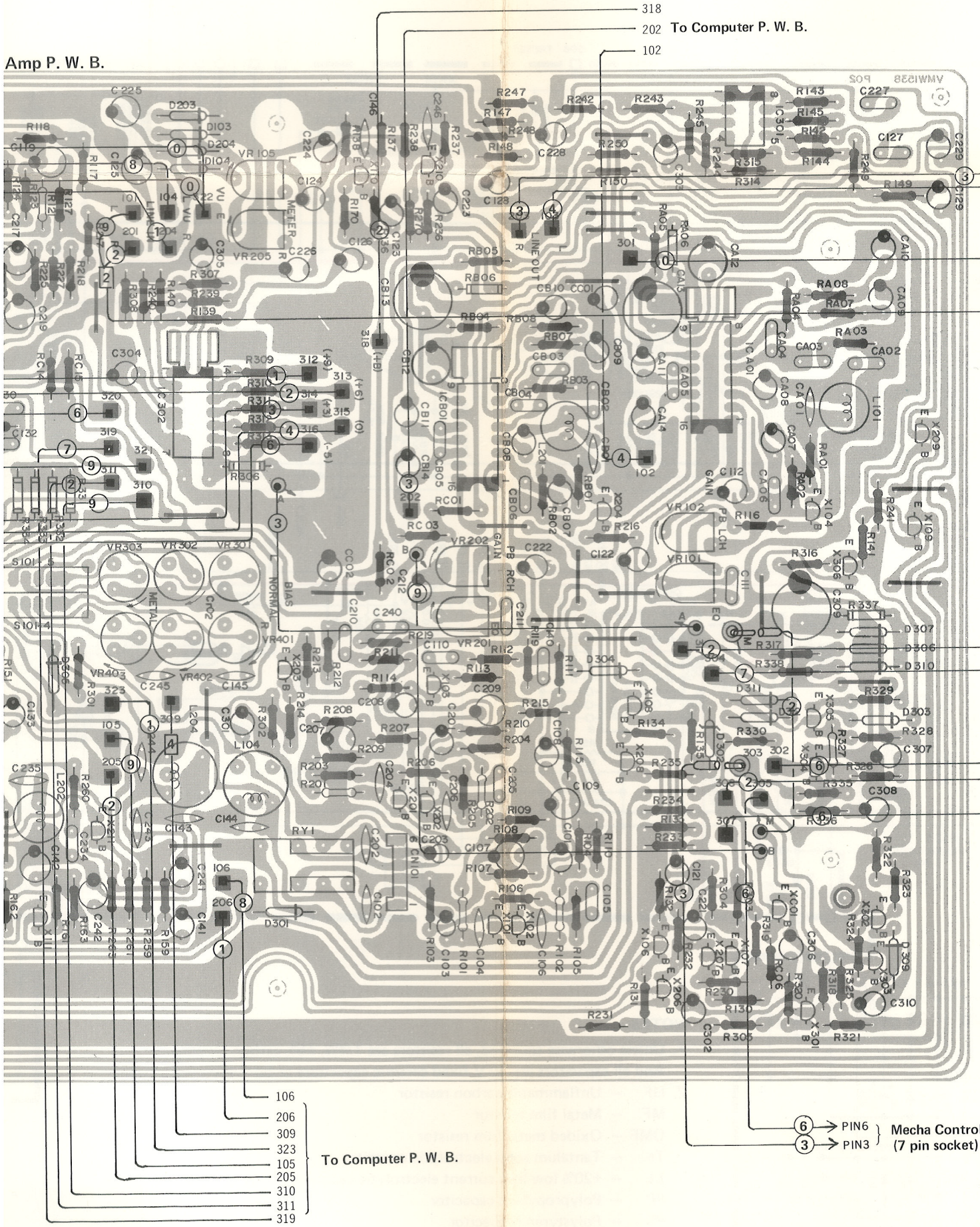

Wiring (2)

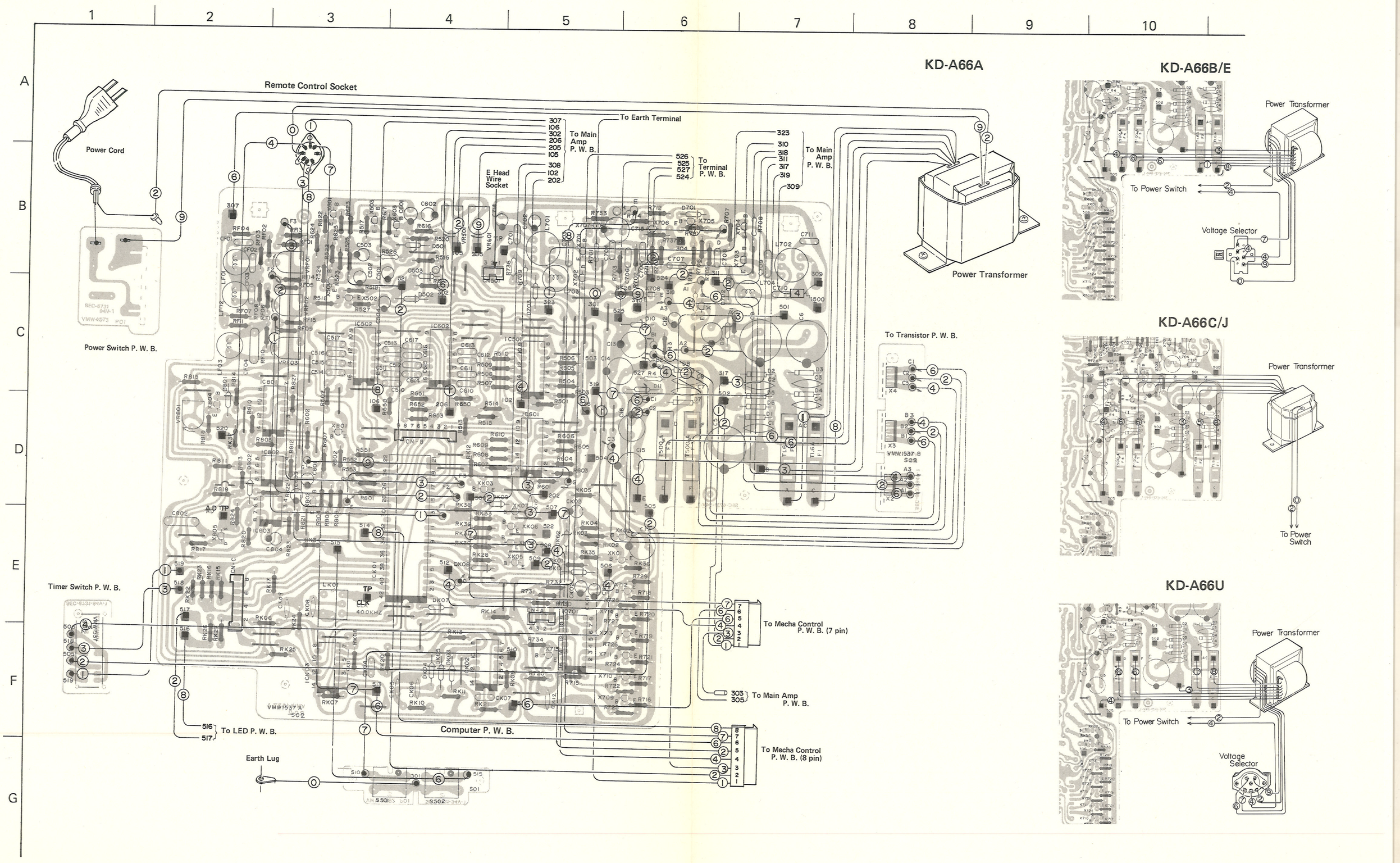
KD-A66A
KD-A66B/E
KD-A66C/J
KD-A66U
Remote Control Socket
Power Cord
Power Switch P. W. B.
Timer Switch P. W. B.
To Earth Terminal
To Main Amp P. W. B.
E Head Wire Socket
To Terminal P. W. B.
Power Transformer
To Transistor P. W. B.
To Mecha Control P. W. B. (7 pin)
To Main Amp P. W. B.
To Mecha Control P. W. B. (8 pin)
To LED P. W. B.
Computer P. W. B.
Earth Lug
To Power Switch
Voltage Selector

Wiring (3)

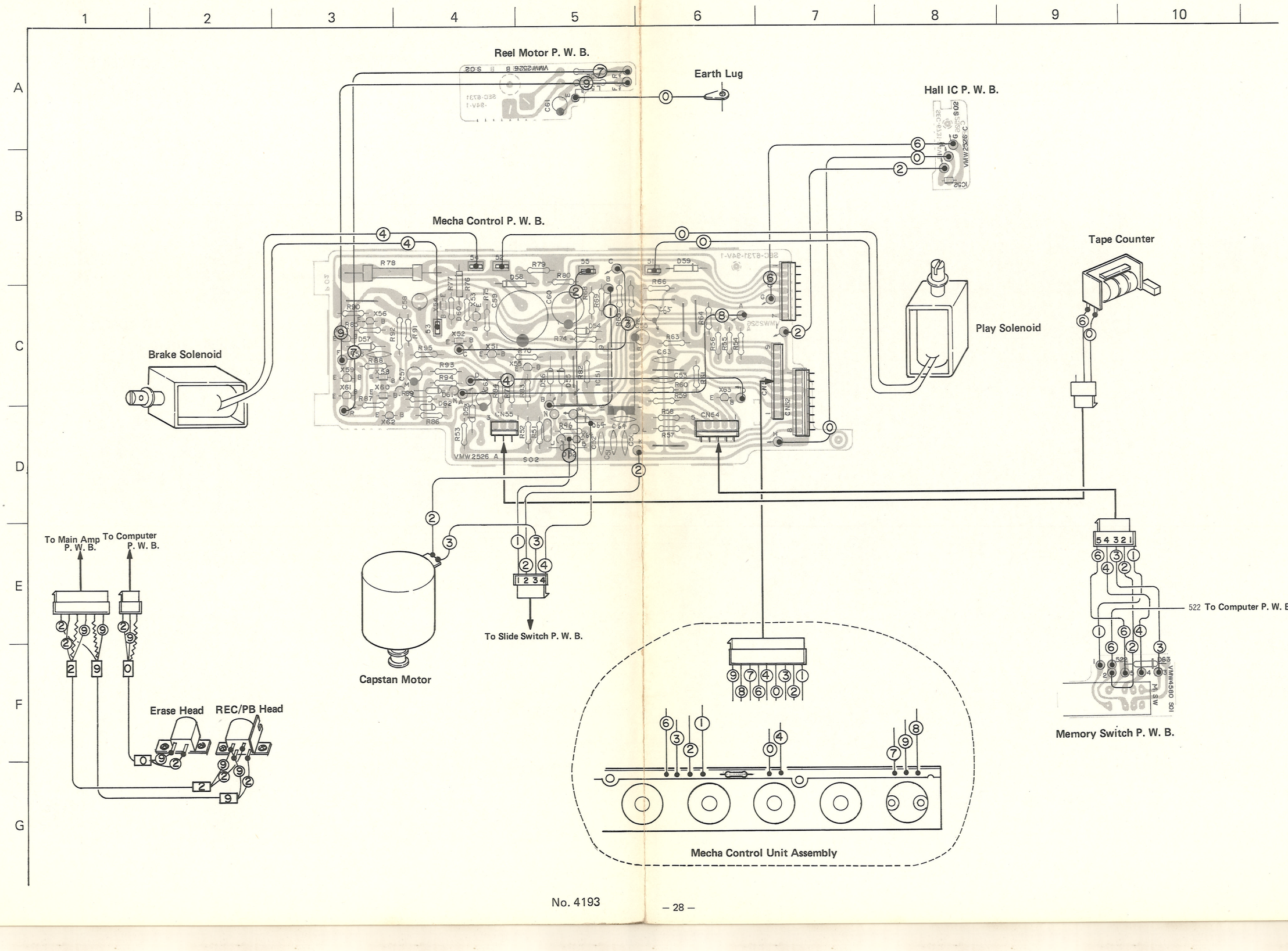
1
2
3
4
5
6
7
8
9
10
A
B
C
D
E
F
G
Reel Motor P. W. B.
Earth Lug
Hall IC P. W. B.
Mecha Control P. W. B.
Brake Solenoid
Play Solenoid
Tape Counter
To Main Amp P. W. B.
To Computer P. W. B.
Erase Head
REC/PB Head
Capstan Motor
To Slide Switch P. W. B.
522 To Computer P. W. B.
Memory Switch P. W. B.
Mecha Control Unit Assembly

AN7362N

Block diagram

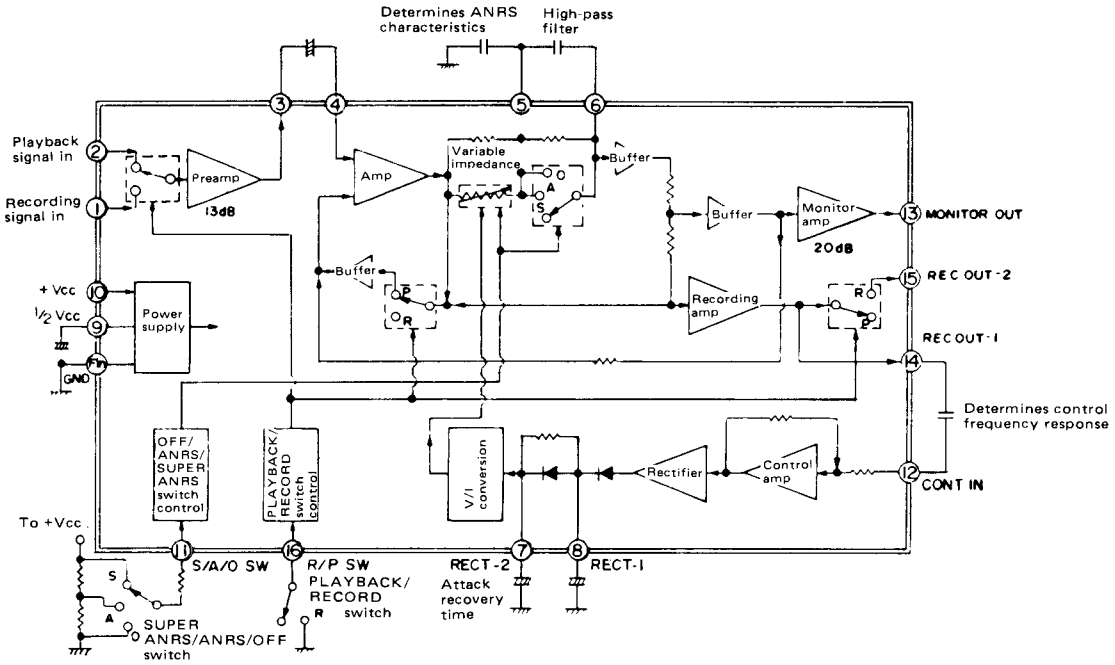

M54886P

Top view

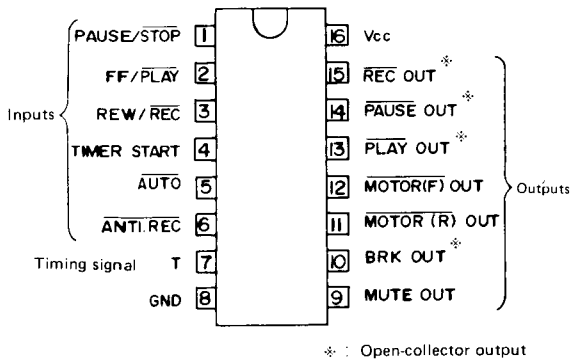

Block diagram

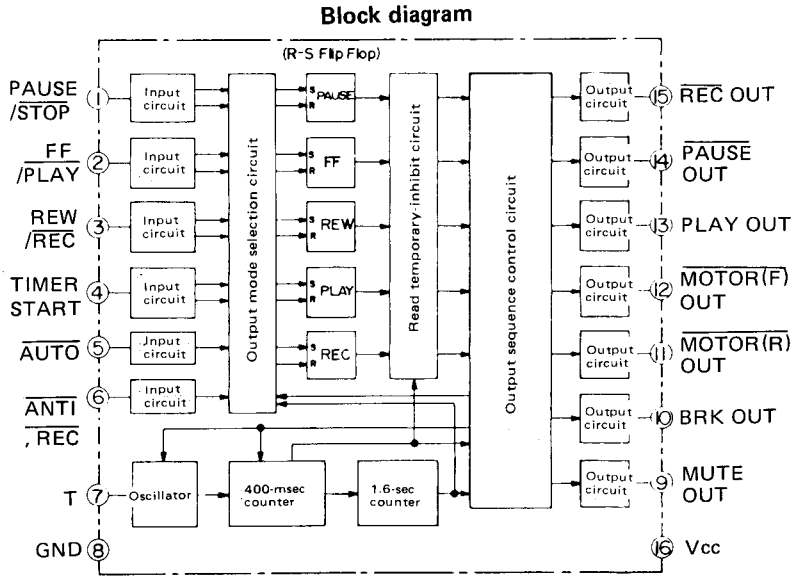

Enclosure Assembly and Electrical Parts List (Except P.W. Board Parts)

⚠ parts are safety assurance parts.
When replacing those parts, make sure to use the specified one.

Ref. No.	Parts No.	Parts Name	Remarks	Q'ty
1	VKS3122-001	Remote Bar		1
2	VYTS404-001	Lock Plate		1
3	VKL4730-00A	Bar Bracket Ass'y		1
(4~9)	ZCKDA66Y-CBF	Front Panel Sub Ass'y		1 set
4	VJC1113-001	Front Panel		1
5	VJK4120-001	Counter Lens		1
6	VJK4121-001	Finder		1
7	VJD4349-001	Disk Plate		1
8	VJD4348-001	Tape Indicator		1
9	VYTN402-001	Sheet		1
10	VXP3051-002	Push Knob		1
11	VKW3001-045	Compression Spring		1
12	VYSA2R6-004	Spacer		1
13	VKL4669-002	Eject Arm		1
14	VKH3013-001	Flange Collar		1
15	VKS4245-001	Lock Lever		1
16	VKH4261-002	Shaft		1
17	VKW4196-001	Torsion Spring		1
18	VKW4195-001	Wire		1
19	VKL3248-00A	Bracket (R) Ass'y		1
20	VKL4822-00A	Eject Lever Ass'y		1
21	VKL4796-002	Eject Arm		1
22	VKW4230-001	Wire		1
23	VKW3002-017	Tension Spring		1
24	VKL4752-002	Lever		1
25	VKH3013-001	Flange Collar		1
26	VKZ4128-001	Special Screw		1
27	VMW4566-001	P.W. Board		1
28	QLP3601-003	Back Light		1
29	QLP3104-333SN	Lamp	Meter display	4
30	VYH4335-002	Lamp Holder		4
32	VKL4754-001	Bracket		1
33	VKZ4011-001	Sheet		1
34	VJT2038-002	Cassette Holder		1
35	VKY4173-002	Cassette Spring		2
36	VKL3228-00B	Holder Arm Ass'y		1
37	VKW4194-004	Holder Spring		1
38	VKL4700-001	Bracket (L)	for Front Panel	1
39	VKZ4012-001	Sheet		1
40	VXP4069-001	Push Knob		2
41	VKW4227-001	Spring		2
42	VJK3154-002	Indicator Lens		1
43	VJK4122-002	Indicator Panel		1
44	VKS3123-002	Indicator Holder		1
45	VKS4002-00A	Air Dump Ass'y		1
46	TFB313563-01	Plate Nut		3
47	VGM0420-003	Level Meter		2
48	VKS3121-001	Lamp Hood		1
49	VKL4713-001	Bracket		1
50	*VJC1114-002	Front Plate		1
51	VJD4373-001	Lever Escutcheon		1
52	VYTA453-001	Blind		1
53	VXS4031-001	Slide Knob	for Timer & Memory	2
54	VJD2154-001	Button Case		1
55	VXP3046-001	Push Button	for Rew	1
56	" -002	"	for FF	1
57	" -003	"	for Play	1
58	" -004	"	for Stop	1
59	" -005	"	for Rec	1
60	" -006	"	for Pause	1
61	VXP4056-001	"	for R. Mute	1
62	VKS4001-001	Button Spacer		7

Ref. No.	Parts No.	Parts Name	Remarks	Q'ty
63	VKL4695-001	Bracket		1
64	VXP4070-00A	Push Knob Ass'y	for Eject	1
65	VKW3001-028	Compression Spring		1
66	VKL4728-002	Knob Bracket		1
(67~69)	ZCKDA66Y-CCA	Cassette Lid Sub Ass'y		1 set
67	VJT3049-001	Cassette Lid		1
68	VJT3050-001	Lid Plate		1
69	VJD4226-001	Head Mark	X Cut	1
70	VXL4114-00A	Knob (L) Ass'y	for Rec	1
71	VXL4115-00A	Knob (R) Ass'y	"	1
72	VXL4116-00A	Knob Ass'y	for Output	1
73	VXQ4030-001	Lever Knob		2
74	VJC1115-001	Top Cover		1
75	VKZ3001-002	Special Screw	for Top Cover	4
76	VJC1116-001	Bottom Cover		1
77	VJF4003-001	Foot		4
78	VYN2058-003KA	Name Plate	KD-A66A	1
	" -002KA	"	KD-A66B	1
	" -004KA	"	KD-A66C	1
	" -005KA	"	KD-A66E	1
	" -006KA	"	KD-A66J	1
	" -007KA	"	KD-A66U	1
79	E48729-002	Plastic Rivet		2
91	VKL1168-00B	Amp Chassis Ass'y		1
92	VKL4729-001	Power Bracket		1
93	VKZ4001-011	Wire Holder		8
94	VTP66C7-012KBS	Power Transformer	KD-A66B	1
		"	KD-A66A	1
		"	KD-A66C/J	1
		"	KD-A66E	1
		"	KD-A66U	1
95	F4932-002	Special Washer		2
96	TAW000504-01	Connector	KD-A66C/J	2
97	E46651-001	Wrapping Terminal		1
98	*VJC1117-002	Rear Panel		1
99	QMP9017-008BS	Power Cord	KD-A66B	1
		"	KD-A66A	1
		"	KD-A66C	1
		"	KD-A66E	1
		"	KD-A66J	1
		"	KD-A66U	1
100	QHS3876-162BS	Strain Relief		1
101	VMJ3003-001	Pin Jack Ass'y		1
102	QMC0888-008	Jack Ass'y (8P DIN Socket)	for Remote	1
104	VKS3108-001	P.C.B. Holder	for Computer P.W.B	1
105	VKS3000-001	P.W.B. Holder	"	3
106	QSS2325-011BS	Voltage Selector Switch	KD-A66B	1
		"	KD-A66A/C/J	1
		"	KD-A66U	1
107	VKL4275-001	Bracket	KD-A66U	1
108	VKL4873-001	Shield Plate		1
115	REE2000	E Ring	Air Dumper Ass'y	1
116	REE2500	E Ring	Lock Lever x 1 Eject Lever (1) Ass'y x 1 Joint Cam Ass'y x 1 Eject Arm x 1 Cassette Holder x 1	5
121	DPSP3010ZS	Screw	Transistor	3
122	DPSP4012ZS	"	Power Transformer	2
123	LPSP2604Z	"	Memory Switch x 2 Timer Switch x 2	4
124	LPSP2606C	"	Front Panel	2
125	LPSP2606Z	"	Front Panel	2
126	LPSP2608Z	"	Front Panel	2
127	LPSP3006ZS	"	Power Switch x 2 Voltage Select Switch x 2 (KD-A66U)	4
128	SBSB2606Z	"	P.W.B.	4

Ref. No.	Parts No.	Parts Name	Remarks	Q'ty
129	SBSB2608Z	Screw	Indicator Escutcheon x 2 Knob bracket x 2	4
130	SBSB3006C	"	for Mecha.	4
131	SBSB3006Z	"	Bar Bracket Ass'y x 1 Power Bracket x 2 Wire Holder x 8 Wrapping Terminal x 1	12
132	SBSB3012Z	"	Heat Sink	2
133	SDSB3008R	"	Rear Cover	1
134	SDSB3006Z	"	Rear Cover	4
135	SDSB3008Z	"	Bottom Cover x 5 Jack x 2	7
136	SSSB3010Z	"	Front Panel	4
137	SDSP2605R	"	Remote Socket	2
138	SSSB3008Z	"	Front Panel	5
139	SSSB3012Z	"	"	1
140	VKZ4143-001	Special Screw	Eject Arm	1
141	SSSP2605R	"	Bracket (R) x 2 Holder Arm Ass'y x 4 Bracket (L) x 3 Button Case x 3	12
142	SSSP2606C	"	Bracket	1
143	SSSP3008CS	"	Counter	1
144	SBSB3008Z	"	Lamp Holder	2
145	SDSP3006RS	"	for Voltage Select Sw.	2

Enclosure Assembly and Electrical Parts

(Except P.W. Board Parts)

KD-A66U

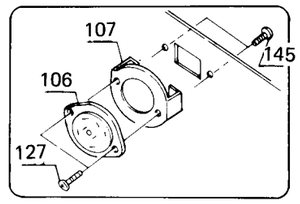

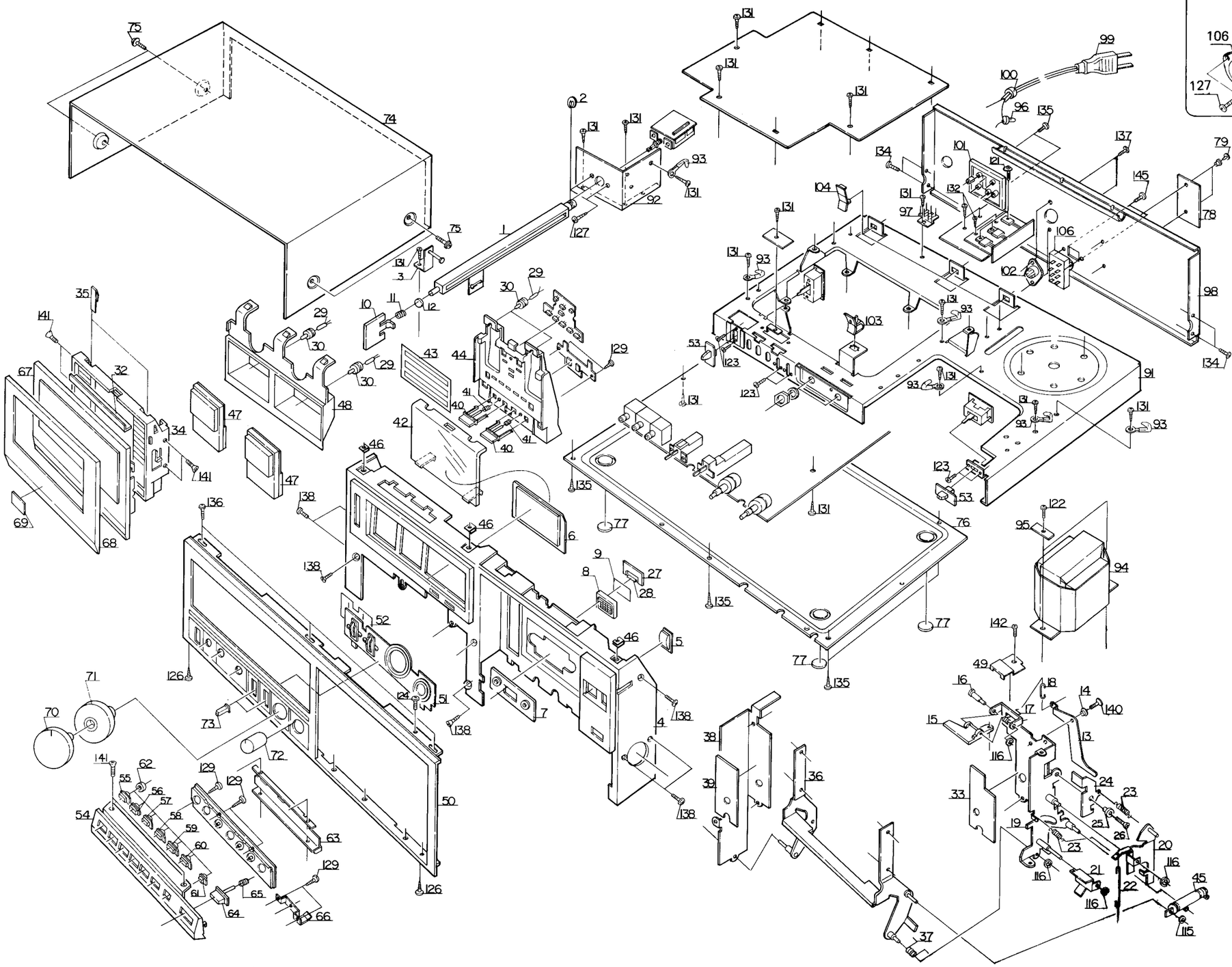

Mechanical Component Parts

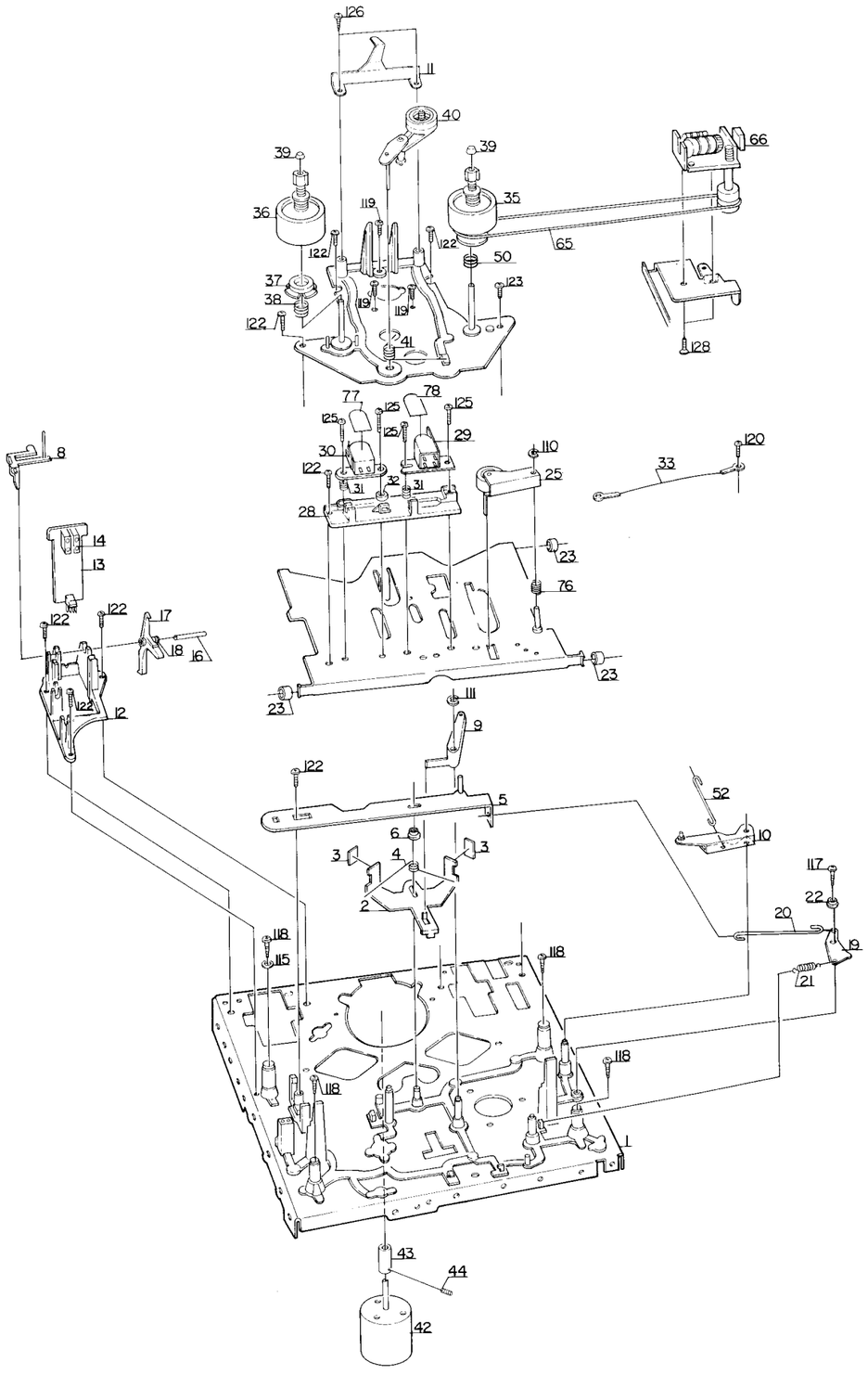

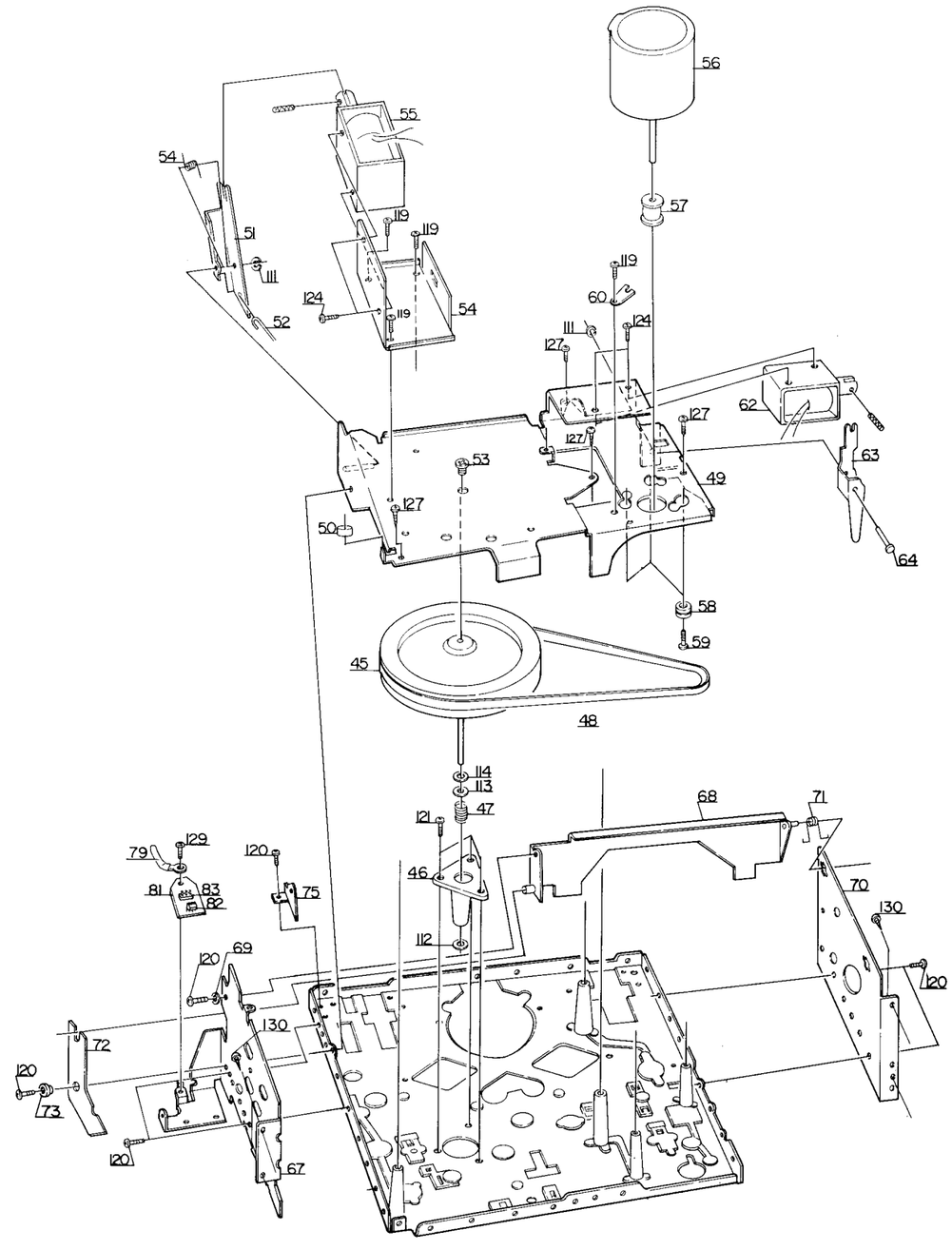

Mechanical Component Parts List

Ref. No.	Parts No.	Parts Name	Remarks	Q'ty
1	VKL1118-00D	Chassis Base Ass'y		1
2	VKL4361-002	Brake Bar		1
3	VYSF101-012	Spacer		2
4	VKW4145-002	Brake Bar Spring	for Brake Bar	1
5	VKL4362-001	Lock Bar		1
6	VKZ4005-001	Stopper	for Brake Bar	1
8	VKS4166-001	Cassette SW. Lever		1
9	VKS4135-00A	Lock Lever Ass'y		1
10	VKL4366-00A	Play Arm Ass'y		1
11	VKY4174-001	Cassette Spring		1
12	VKS3109-001	Switch Holder (L)		1
13	VMW4522-001	P.W. Board (L)		1
14	QSP0029-001	Slide Switch		2
15	QMV5004-004	Connector		1
16	VKH4264-001	Shaft		1
17	VKS4136-002	Switch Lever		1
18	VKW4138-001	Pressure Lever Spring		1
19	VKL4399-002	Eject Safety Lever		1
20	VKW4142-001	Connecting Wire		1
21	VKW3002-004	Spring		1
22	VKH3001-027	Collar		1
23	VKZ3003-001	Rubber Tube		3
24	*VKL4676-00B	Slide Base Ass'y		1
25	VKP4108-00A	Pinch Roller Arm Ass'y		1
26	VKW3002-044	Tension Spring	for Slide Base	1
27	TJN265559-02	Silencer	"	1
28	*VKS2102-001	Head Mount Base		1
29	ZMM089401-0D	R/P Head Ass'y		1
30	ZMM090414-0A	E Head Ass'y		1
31	VKW3001-020	Compression Spring	for R/P and E Heads	2
32	VKH4215-001	Head Collar		1
33	VMZ0008-00A	Wire Ass'y		1
34	VKL3155-00A	Reel Disk Bracket Ass'y		1
35	VKR4113-00B	Take-up Reel Ass'y		1
36	VKR4118-00A	Supply Reel Ass'y		1
37	VKS4130-001	Back Tension Base		1
38	VKW3001-026	Compression Spring	for Back Tension	1
39	VKS4131-001	Reel Stopper		2
40	VKS4151-00B	Idler Ass'y Unit		1
41	VKW4134-001	Idler Spring		1
42	MDN-7V1-2	Reel Motor		1
43	VKR4121-001	Motor Pulley		1
44	YRS2603B	Screw	for Motor Pulley	1
45	VKF3107-00B	Flywheel Ass'y		1
46	VKF3103-00B	Capstan Metal		1
47	T30301-137	Spring		1
48	VKB3001-007	Capstan Belt		1
49	VKL4684-00A	Hold Base Ass'y		1
50	VKW3001-046	Compression Spring		1
51	VKL4368-002	Play Solenoid Lever		1
52	VKW4137-001	Connecting Wire		1
53	TEP357456-01	Thrust Screw		1
54	VKL4398-002	Play Solenoid Bracket		1
55	VGP0301-004	D.C. Solenoid Ass'y	for Play	1
56	MMC-6A2HS	D.C. Motor	for Capstan	1
57	VKS4139-002	Motor Pulley		1
58	TER357465-03	Cushion Rubber		3
59	VKZ4109-001	Motor Screw		3
60	TFB345469-01	Rubber Stopper		1
61	VKZ4001-011	Wire Holder		1
62	VGP0201-007	D.C. Solenoid Ass'y	for Brake	1
63	VKL4363-002	Lock Solenoid Lever		1
64	VKH4194-002	Shaft		1
65	VKB3000-012	Counter Belt		1
66	VKC6111-002T	Counter Ass'y	Reset Knob=VKC6111-004T	1

Ref. No.	Parts No.	Parts Name	Remarks	Q'ty
67	*VKL3249-001	Side Bracket (R)		1
68	VKL4403-00B	Shift Arm Ass'y		1
69	VKH3001-033	Flange Collar		1
70	VKL4682-001	Side Bracket (L)		1
71	VKW4156-001	Shift Arm Spring		1
72	VKL4701-002	Shift Lever		1
73	VKH3001-027	Flange Collar		1
74	VKW3602-044	Tension Spring		1
75	VKL4757-001	Shaft Holder		1
76	VKW4202-001	Pinch Roller Spring		1
77	THC037417-02	Head Plate	SA for E Head	1
78	VND4012-001	Head Plate	X cut for REC/PB Head	1
79	VKZ4001-010	Wire Holder		1
81	VMW4530-002	P.W. Board		1
82	DN6835	Hall IC		1
83	QMV5005-003	Connector		1
110	REE2000	E Ring	Pinch Roller	1
111	REE2500	"	Lock Lever Ass'y x 1 Play Solenoid Lever x 1 Lock Solenoid Lever x 1	3
112	Q03093-522	Washer	Flywheel	1
113	" -621	"	"	1
114	" -827	"	"	1
115	WNB2600N	"	Slide Base Ass'y	1
116	DPSP2608V	Screw	Mecha. Con. P.W. Board	1
117	GPSA2608Z	Tapping Screw	Eject Safety Lever	1
118	GPSA2612Z	"	Slide Base	4
119	LPSP2604Z	Screw	Reel Motor x 3 Play Solenoid Bracket x 3 Rubber Stopper x 1	7
120	LPSP2605Z	"	Shaft Holder x 1 Hold Base x 2 Side Bracket x 2 Shift Arm ~ Side Bracket x 3 Shift Lever x 1	9
121	LPSP2606Z	Screw	Capstan Metal x 1 Wire Holder x 2	3
122	SPSP2606Z	Screw	Head Mount Base x 1 Switch Holder x 3 Reel Ass'y Unit x 4	8
124	SPSP3003ZS	"	Solenoid x 2 Solenoid x 2	4
125	SPSX2010N	"	REC/PB Head x 2 E Head x 2	4
126	SBSB2006Z	"	Cassette Spring	2
127	SBSB2610Z	"	Hold Base	2
128	SSSP3006ZS	"	Counter Ass'y	2
129	SDSP2605Z	"	Hall IC P.W. Board	1
130	SSSB3006C	Screw	for Mecha.	4

Main Amp. P.W. Board Parts

		1	2	3	4	5	6	7	8	9	10	11	12	13	14	15
ICA01	C. Tester	6	6	9.1	5.9	9.3	9.3	9.1	9.2	9.0	19.0	1.5	9.0	9.4	9.4	9.4
	E. Voltmeter	9	9.1	8.9	9.1	9.2	9.2	9.0	9.1	9.2	18.5	1.5	9.0	9.2	9.2	9.2
IC301	C. Tester	12	12	3.7(7.5)	0	3.7(7.5)	12	12	23							
	E. Voltmeter	11.4	11.4	10.7	0	10.7	11.3	11.3	22.7							
IC302	C. Tester	0	0	0	2.8	2.8	0	0	13.5	0	0	0	0	0	0	
	E. Voltmeter	0	0	0	2.7	2.7	0	0	13.5	0	0	0	0	0	0	

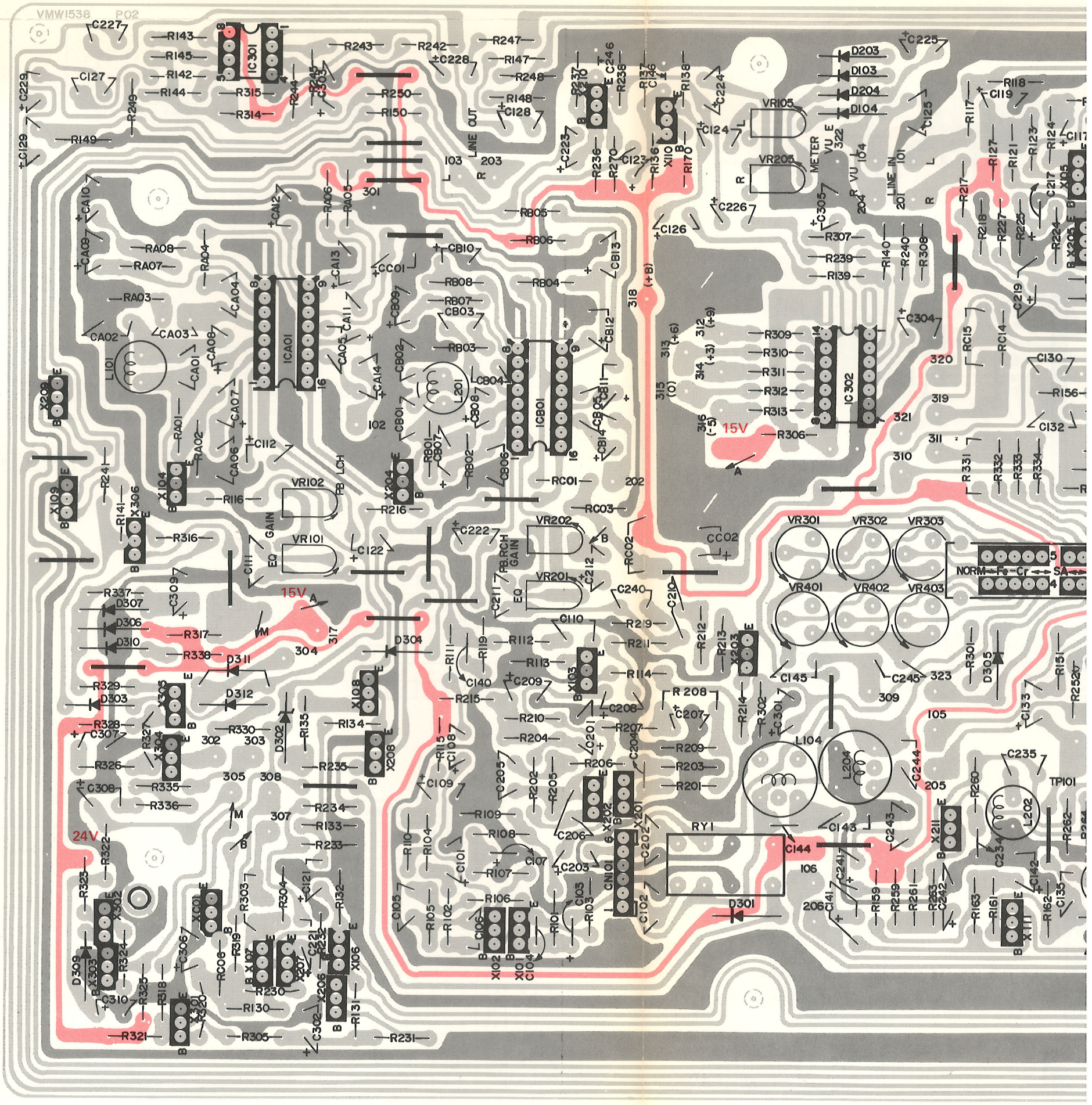

5	6	7	8	9	10	11	12	13	14	15	16
9.3	9.3	9.1	9.2	9.0	19.0	1.5	9.0	9.4	9.4	9.4	0.7
9.2	9.2	9.0	9.1	9.2	18.5	1.5	9.0	9.2	9.2	9.2	0.7
7(7.5)	12	12	23								
0.7	11.3	11.3	22.7								
2.8	0	0	13.5	0	0	0	0	0	0		
2.7	0	0	13.5	0	0	0	0	0	0		

Voltage values are measured by the following meter without input signal at playback mode.

C. Tester = Circuit Tester (20 kΩ impedance)

E. Voltmeter = Electronic Voltmeter

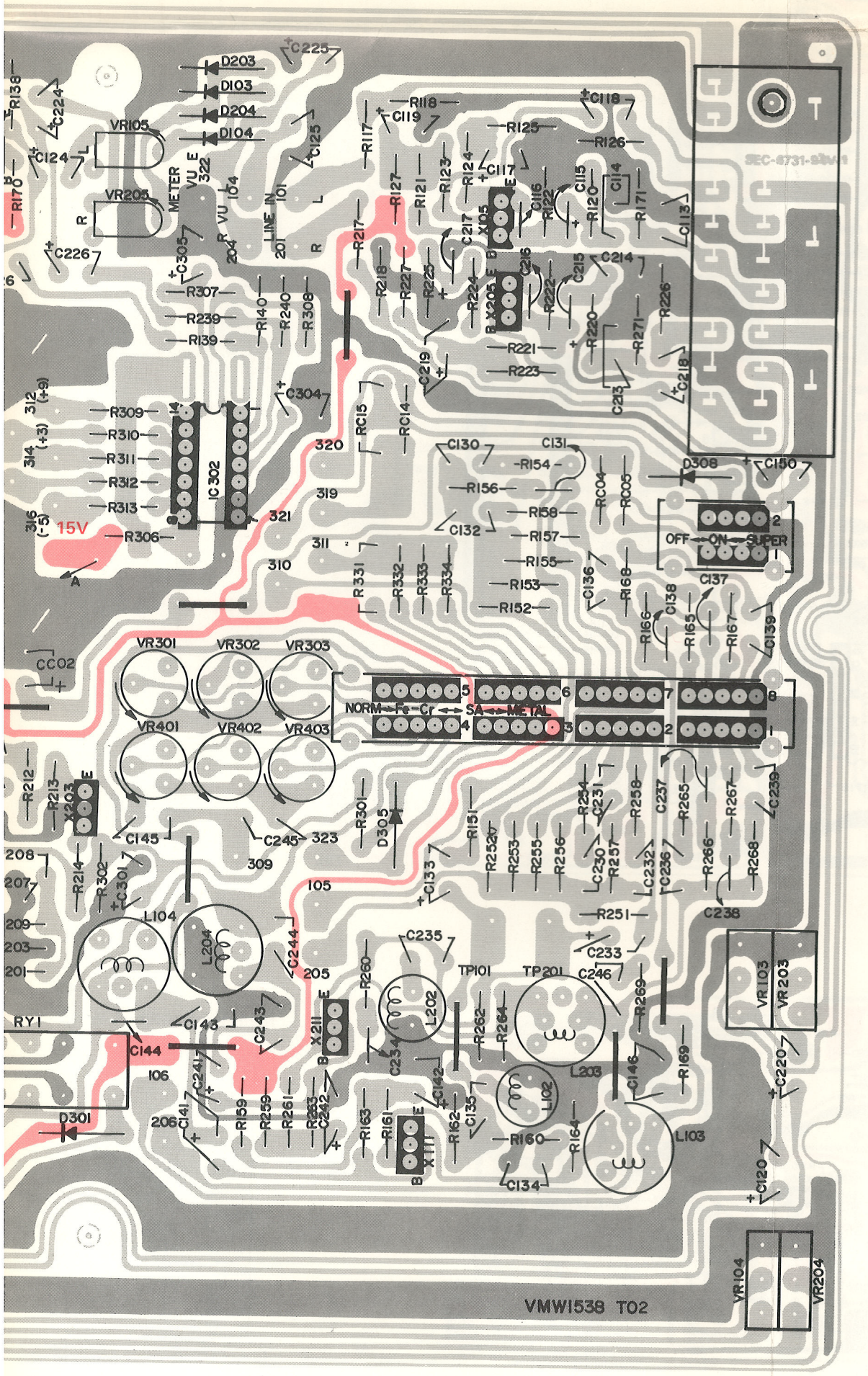

	C. Tester			E. Voltmeter		
	B	C	E	B	C	E
X101	0.3	1.7	0	0.55	1.7	0
102	1.7	15	1.1	1.7	14.5	1.1
103	0.7	0	0	0.6	0	0
104	0	0	0	0	0	0
105	2.0	7.5	1.4	1.9	7.6	1.1
106	3.1	2.7	2.7	4.2	3.6	3.6
107	0	0	2.7	0	0	3.6
108	0	0	0	0	0	0
109	0	0	0	0	0	0
110	10.4	21.5	9.1	10.7	22.5	10.1
111	1.2	6.5	1.0	1.55	7.3	1.0
XC01	0	1.2	0	0	1.2	0
X301	0	22	0	0	22	0
302	0	2.8	0	0	28	0
303	0.8	0	0	0.75	0.1	0
304	0	22	0	0	22.5	0
305	22.5	0	22.5	22.7	0	22.4
306	22.5	0	22	22.5	0	22.4

Computer P.W. Board Parts

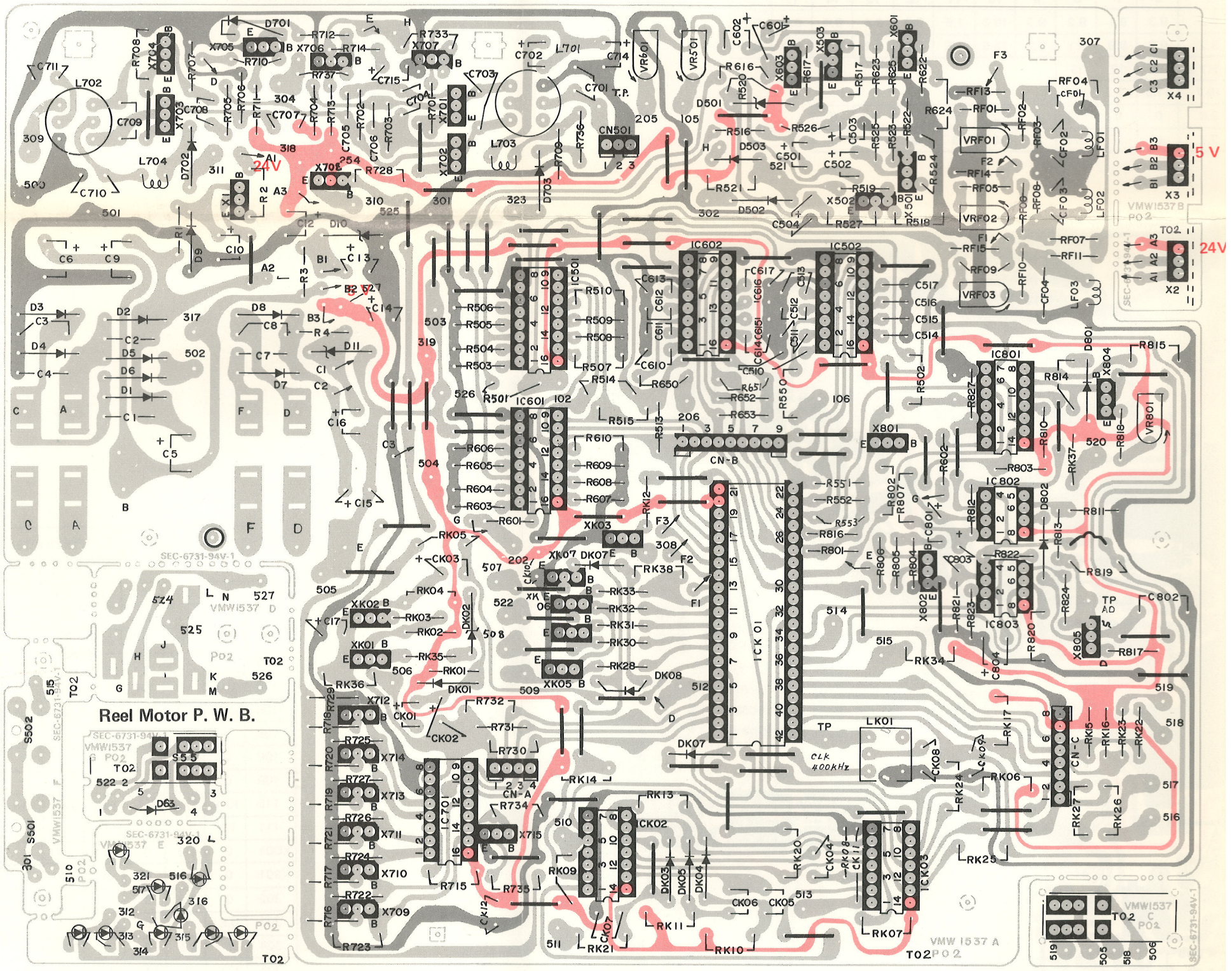

Mecha Control P. W. B.

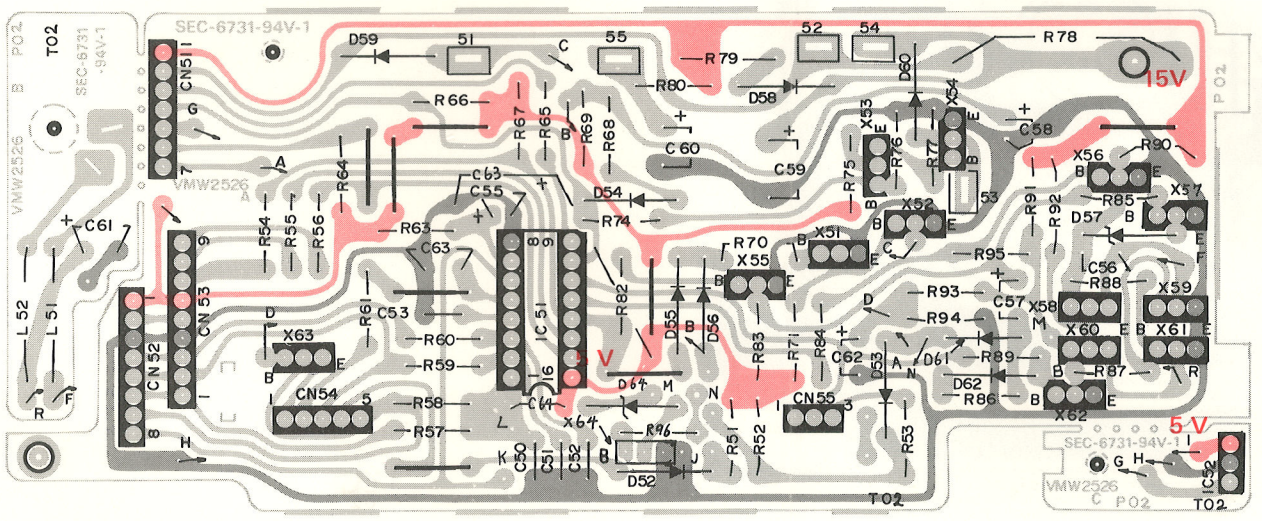

Memory Switch P. W. B.

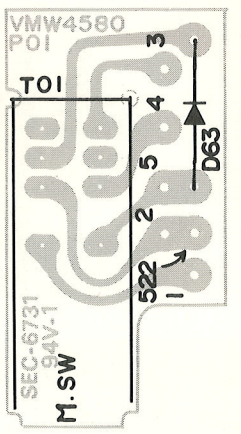

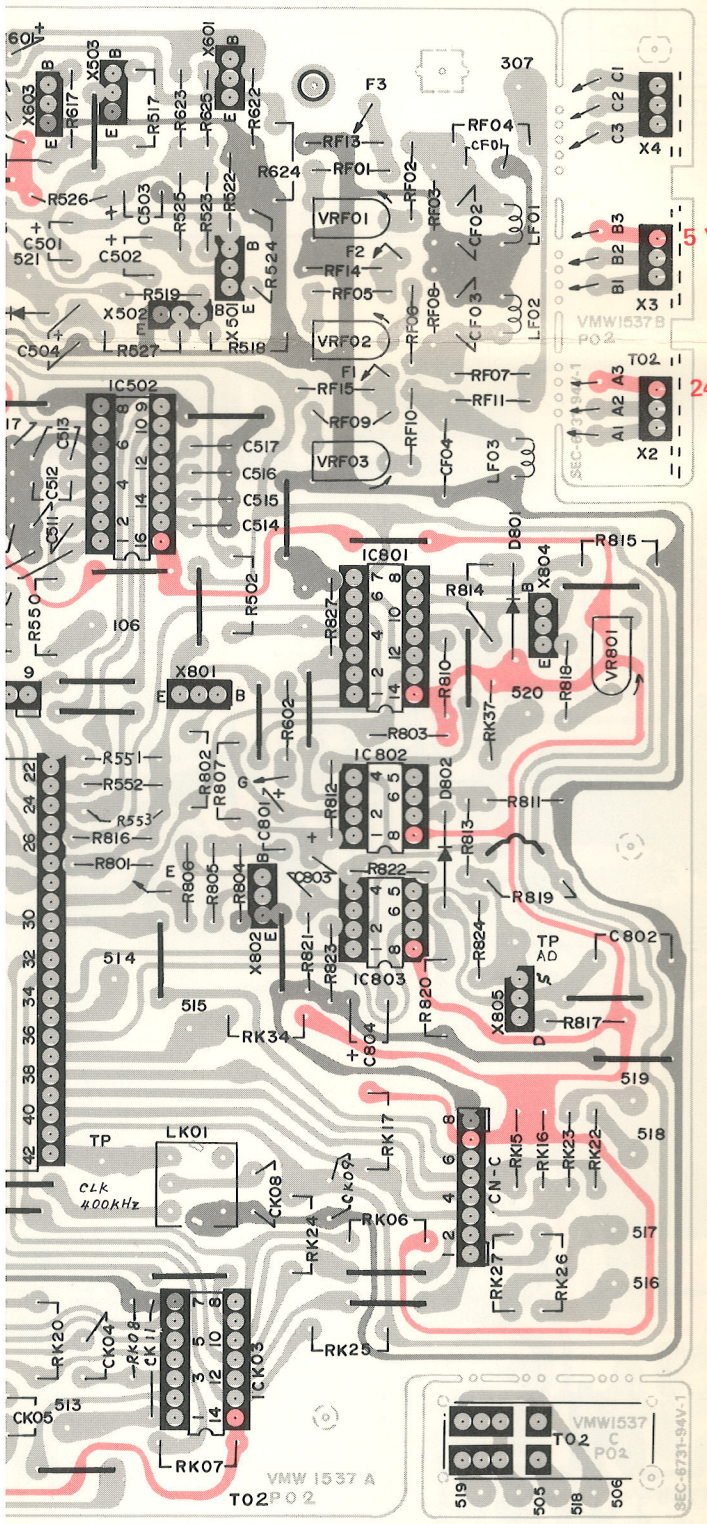

		1	2	3	4	5	6	7	8	9	10	11	12	13	14	15	16
IC501	C. Tester	0	0	0	0	0	0	-4.7	0	-0.7	4.6	4.6	0	0	0	0	4.7
	E. Voltmeter	0	0	0	0	0	0	-4.7	0	-0.7	4.7	4.7	0	0	0	0	4.7
IC502	C. Tester	0	0	1	0	0	0	-4.7	0	-0.8	4.6	4.6	1	0	0	0	4.7
	E. Voltmeter	0	0	4.9	0	0	0	-4.7	0	-0.7	4.6	4.6	-0.9	0	0	0	4.7
IC701	C. Tester	0	0	0.7	0	0	0	-4.7	0	-0.6	4.6	4.6	0.7	0	0	0	4.7
	E. Voltmeter	0	0	0.8	0	0	0	-4.7	0	-0.7	4.7	4.7	0.7	0	0	0	4.7
IC801	C. Tester	0	0	0	0	4.2	4.2	-4.7	-4.5	4.6	0	4.6	-4.2	4.5	4.7		
	E. Voltmeter	0	0	0	0	-4.7	-4.7	-4.7	-4.7	0.7	0	4.7	-4.7	4.5	4.7		
IC802	C. Tester	0	0	0	-4.7	0	0	(3.0)	4.7								
	E. Voltmeter	0	0	0	-4.7	0	0	(-4.7)	4.7								
IC803	C. Tester	4.1	-0.4	0	-4.7	0	0	4.1	4.7								
	E. Voltmeter	4.1	-0.4	0	-4.7	-0.1	0	-3.3	4.7								
ICK02	C. Tester	0	0	3.4	3.4	3.4	0	0	(2.0)	(2.5)	(1.9)	0	4.4	1.6	4.7		
	E. Voltmeter	0	0	3.6	3.6	4.7	0	0	(2.0)	(2.5)	(1.9)	0	4.7	1.7	4.7		
ICK03	C. Tester	1.9	0	0.3	4.4	(2)	(2.3)	0	4.5	0	3.5	-0.5	0.1	4.0	4.7		
	E. Voltmeter	2.2	0	0.4	4.7	(2)	(2.3)	0	4.7	0	3.7	-0.5	0.1	+4.1	4.7		

		1	2	3	4	5	6	7	8	9	10	11	12	13	14	15	16	17	18	19	20	21	22
ICK01	C. Tester	1.6	4.6	4.6	-0.8	3.1	4.3	-3.2	2.1	2.1	0	0	0	-3.7	0	0	4.6	4.6	-0.7	4.0	4.0	4.7	4.6
	E. Voltmeter	1.6	4.7	4.7	-0.7	3.1	4.7	-4.7	2.4	2.4	-0.1	-0.1	-0.1	-3.7	0	0	4.7	4.7	-0.7	4.1	4.7	4.7	4.7
		23	24	25	26	27	28	29	30	31	32	33	34	35	36	37	38	39	40	41	42		
	C. Tester	4.6	-0.8	-4.2	4.6	4.6	-0.8	-4.2	4.5	0	0	4.5	4.1	4.3	-3.4	4.1	4.1	4.1	4.1	-4.7	1.6		
	E. Voltmeter	4.7	-0.7	-4.7	4.7	4.7	-0.7	-4.7	4.6	0	-0.5	4.7	4.2	4.7	-3.3	4.7	4.7	4.7	4.7	-4.7	1.7		

	C. Tester			E. Voltmeter		
	B	C	E	B	C	E
X1	24	31	23.5	24	31	23.5
X2	22.5	31	23.2	22.5	31	23.2
X3	5.3	15.5	4.7	5.3	15.5	4.7
X4	0.6	4.4	0	0.6	4.4	0
X501	2.7	13	3.3	3.9	13	3.3
502	0.6	0	0	0.6	0	0
503	0	0	0	0	0	0
XK01	-4.1	-4.7	-4.7	-4.1	-4.7	-4.7
K02	-4.3	4.6	-4.7	-4.7	4.6	-4.7
K03	0.7	0	0	0.7	0	0
K04	0	2.1	0	0	2.4	0
K05	0	2.1	0	0	2.4	0
K06	0	4.3	0	0	4.7	0
K07	0	2.0	0	0	2.2	0

	C. Tester			E. Voltmeter		
	B	C	E	B	C	E
X701	-1.3	20	0.5	-1.5	20	0.5
702	-1.3	20	0.5	-1.5	20	0.5
703	-2.2	16.5	0.3	-2.7	16.5	0.3
704	-2.2	16.5	0.3	-2.7	16.5	0.3
705	0.6	0	0	0.6	0	0
706	0	6.2	0	0	6.5	0
707	0.6	0.1	0	0.6	0.1	0
708	19.0	22.7	18.5	19.2	22.7	18.5
709	0	18.5	0	0	19.2	0
710	0.7	0	0	0.7	0.1	0
711	0	18.5	0	0	19.2	0
712	0	19.0	0	0	19.2	0
713	0	18.8	0	0	19.2	0
714	0	19.0	0	0	19.2	0
715	0	17.5	0	0	19.2	0

	C. Tester			E. Voltmeter		
	B	C	E	B	C	E
X801	-4.2	4.5	-4.7	-4.7	4.7	-4.7
802	0.6	0	0	0.6	0	0
804	4.3	-0.3	4.3	4.5	-0.3	4.7
805	0.3	3.4	0	0.3	0	4.5

Memory Switch P. W. B.

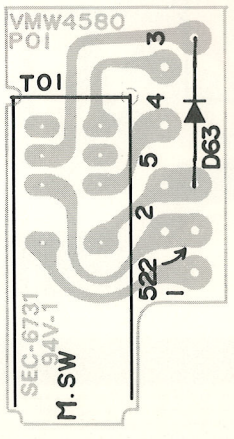

	C. Tester			E. Voltmeter		
	B	C	E	B	C	E
X51	0.7	0.1	0	0.7	0.1	0
52	0.1	26.5	0	0	26.7	0
53	1.4	0.8	0.7	1.4	0.8	0.8
54	0.7	0	0	0.8	0.1	0
55	0	0.8	0	0.1	4.1	0
56	0	6.3	0	0	6.3	0
57	0.7	0	0	0.7	0	0
58	6.3	13	5.7	6.3	13	5.7
59	0	5.7	0	0	5.7	0
60	0.1	13	0.1	0.1	13	0.1
61	0.7	0.1	0	0.7	0.1	0
62	0.7	0.1	0	0.7	0.1	0
63	0	1.9	4.3	0	2.2	4.7
64	0	0	0	0	0.1	0

IC51 M54886P

PIN / OUTPUT / mode	14 PAUSE	9 MUTE *	15 REC	13 PLAY	10 BRK *	12 MOTOR(F)	11 MOTOR(R)
STOP	H	H	H	H	L	H	H
FF	H	H	H	H	H	L	H
REW	H	H	H	H	H	H	L
PLAY	H	L	H	L	H	L	H
REC	H	L	L	L	H	L	H
REC/PAUSE	L	L	L	H	L	H	H
PAUSE	L	H	H	H	L	H	H

* marks are "H" output, other output are "L"

Main Amp. P.W. Board Parts List

⚠ parts are safety assurance parts.
When replacing those parts, make sure to use the specified one.

Ref. No.	Parts No.	Parts Name	Remarks		Q'ty
	VMW1538-003	P.W. Board			1
R101,201	QRD141J-224SL	C. Resistor (Low Noise)	220kΩ	1/4W	2
R102,202,117,217,151, 251	" -823SL	"	82kΩ	"	6
R103,203,124,224	" -820SY	C. Resistor	82Ω	"	4
R104,204,160,260	" -273SY	"	27kΩ	"	4
R105,205	QRD147J-184S	"	180kΩ	"	2
R106,206,317,322,328	QRD141J-682SY	"	6.8kΩ	"	5
R107,207,170,270	" -101SY	"	100Ω	"	4
R108,208,329,C05	" -681SY	"	680Ω	"	4
R109,209,134,234,316, 338	" -102SY	"	1kΩ	"	6
R110,210,114,214,142, 242,301,302,303,321, 325,336	" -103SY	"	10kΩ	"	12
R111,211,141,241,148, 248,171,271,A01,B01, C04	" -472SY	"	4.7kΩ	"	11
R112,212,330	" -562SY	"	5.6kΩ	"	3
R113,213,118,218,126, 226,132,232,133,233, 136,236,137,237,149, 249,157,257,162,262, C01	" -104SY	"	10kΩ	"	21
R115,215,164,264	" -152SY	"	1.5kΩ	"	4
R116,216,123,223,145, 245,163,263,307,323, A02,B02	" -222SY	"	2.2kΩ	"	12
R119,219	" -822SY	"	8.2kΩ	"	2
R120,220,A03,B03	" -680SY	"	68Ω	"	4
R121,221	" -334SL	C. Resistor (Low Noise)	330kΩ	"	2
R122,222	" -473SL	"	47kΩ	"	2
R125,225,138,238,150, 250,304	" -332SY	C. Resistor	3.3kΩ	"	7
R127,227,140,240	" -392SY	"	3.9kΩ	"	4
R130,230,143,243,305	" -473SY	"	47kΩ	"	5
R131,231	QRD147J-394S	"	390kΩ	"	2
R135,235,318,320,C06	QRD141J-153SY	"	15kΩ	"	5
R139,239	" -103SY	"	10kΩ	"	2
R144,244	" -224SY	"	220kΩ	"	2
R147,247,309~313	" -151SY	"	150kΩ	"	7
R152,252	" -334SY	"	330kΩ	"	2
R153,253	QRD147J-684S	"	680kΩ	"	2
R154,254	QRD141J-273SY	"	27kΩ	"	2
R155,255	" -154SY	"	150kΩ	"	2
R156,256	" -563SY	"	56kΩ	"	2
R158,258,314,315	" -683SY	"	68kΩ	"	4
R159,259,324	" -222SY	"	2.2kΩ	"	3
R161,261	QRD147J-125S	"	1.2MΩ	"	2
R165,265,167,267,C14,15	QRD141J-331SY	"	330Ω	"	6
R166,266	" -561SY	"	560Ω	"	2
R168,268	" -471SY	"	470Ω	"	2
R306,337	⚠QRD149J-181S	Unflammable Resistor	180Ω	"	2
R308	QRD141J-562SY	C. Resistor	5.6kΩ	"	1
R319	QRD147J-272S	"	2.7kΩ	"	1
R326	QRD147J-271S	"	270Ω	"	1
R327	QRD141J-153SY	"	15kΩ	"	1
R331	⚠QRD149J-681S	Unflammable Resistor	680Ω	"	1
R332	⚠ " -561S	"	560Ω	"	1
R333	⚠ " -391S	"	390Ω	"	1
R334	⚠ " -390S	"	39Ω	"	1
R335	QRD141J-332SY	C. Resistor	3.3kΩ	"	1
RA04,B04	QRD147J-155S	"	1.5MΩ	"	2
RA05,B05	" -122S	"	1.2kΩ	"	2
RA06,B06	QRD149J-221S	Unflammable Resistor	220Ω	"	2
RA08,B08	QWY123-019	Wire			2
RC02,C03	QRD147J-123S	C. Resistor	12kΩ	"	2
	QWY123-019	Bus Wire	10 mm		23

Ref. No.	Parts No.	Parts Name	Remarks		Q'ty
C101,201	QEB41EM-106M	E. Capacitor (Low Leak)	10μF	25V	2
C102,202,143,243	QCS11HJ-391	F.C. Capacitor	390pF	50V	4
C103,203	QEE51EM-475	E. Capacitor (Tantal)	4.7μF	25V	2
C104,204,146,246	QCS11HJ-101	F.C. Capacitor	100pF	50V	4
C105,205	QFM41HJ-183	Mylar Capacitor	0.018μF	50V	2
C106,206	QCS11HJ-680	F.C. Capacitor	68pF	50V	2
C107,207	QET40JR-227N	E. Capacitor	220μF	6.3V	2
C108,208,120,220,125 225,301,303,305,C14 B14,127,227	QET41HR-475N	"	4.7μF	50V	13
C109,209	QET41ER-336N	"	33μF	25V	2
C110,210	QFM41HJ-153	Mylar Capacitor	0.015μF	50V	2
C111,211,131,231 132,232,A02,B02	QFM41HJ-152	"	0.0015μF	50V	8
C112,212,118,218,122,222	QEB41HM-105M	E. Capacitor (Low Leak)	1μF	50V	6
C113,213	QCY41HK-681	F.C. Capacitor	680pF	50V	2
C114,214	QCS11HJ-100	"	10pF	50V	2
C115,215	QEB41EM-335M	E. Capacitor (Low Leak)	3.3μF	25V	2
C116,216	QCS11HJ-471	F.C. Capacitor	470pF	50V	2
C117,217	QET41AR-107N	E. Capacitor	100μF	10V	2
C119,219	QET41ER-107N	"	100μF	25V	2
C121,221,123,223,129, 229,133,233,141,241,02	QET41HR-105N	"	1μF	50V	11
C124,224	QET41ER-225N	"	2.2μF	25V	2
C126,226,302,307,A11,B11	QET41HR-335N	"	3.3μF	50V	6
C130,230,140,240	QFM41HJ-182	Mylar Capacitor	0.0018μF	50V	4
C134,234	QFM41HJ-104	"	0.1μF	50V	2
C135,235,A01,B01	QCS11HJ-201	F.C. Capacitor	200pF	50V	4
C136,236	QFM41HJ-822	Mylar Capacitor	0.0082μF	50V	2
C137,237,A05,B05	QFM41HJ-332	"	0.0033μF	50V	4
C138,238,139,239	" -562	"	0.0056μF	50V	4
C144,244	QCS12HJ-201	F.C. Capacitor	200pF	50V	2
C145,245	QCY12HK-221	"	220pF	50V	2
C150	QEE41EM-105B	E. Capacitor (Tantal)	1μF	25V	1
C304,C01	QET41HR-106N	E. Capacitor	10μF	50V	2
C306	QET41ER-476N	"	47μF	25V	1
C308,310	QET41AR-476N	"	47μF	10V	1
C309	QET41ER-477N	E. Capacitor	470μF	25V	1
CA03,B03	QFM41HJ-273	Mylar Capacitor	0.027μF	50V	2
CA04,B04	QFM41HK-222	"	0.0022μF	50V	2
CA06,B06	QFM41HJ-103	"	0.01μF	50V	2
CA07,B07,A08,B08	QEB41HM-105M	E. Capacitor (Low Leak)	1μF	50V	4
CA09,B09	" -334M	"	0.33μF	50V	2
CA10,B10	QEB41EM-475M	"	4.7μF	25V	2
CA12,B12	QET41ER-107N	E. Capacitor	100μF	25V	2
CA13,B13	" -477N	"	470μF	25V	2
C C02	QET41HR-105N	"	1μF,	50V	1
VR101,201	QVP8A0B-024	V. Resistor	20kΩ		2
VR102,202	" -054	"	50kΩ		2
VR105,205	" -023	"	3kΩ		2
VR301,401	QVP4A0B-224	"	220kΩ		2
VR302,402,303,403	" -104	"	100kΩ		4
L101,201,102,202	VQP0001-183S	Inductor			4
L103,203	VQP001-682S	"			2
L104,204	TAC00320-01	"	18mH		2
	E43727-002	Tab			36
	QMV5005-006	Plug Ass'y			1
	VMZ0005-001	Post Pin	Mute off		2

Ref. No.	Parts No.	Parts Name	Remarks	Q'ty
X101,201,102,202,105 205	2SC1845 (E.U)	Si. Transistor		6
X103,203,106,206,107 207,110,210	2SC945L (QA,PA)	"		8
X104,204,109,209	2SC2001 (K.L)	"		4
X108,208	2SC945L (PA,KA)	"		2
X111,211	2SC923 (U)	"		2
X301,303,C01	2SC945L (QA,PA)	"		3
X302,304	2SC945L (PA,KA)	"		4
X305,306	2SA733A (P.K)	"		2
ICA01,B01	AN7362N	Super ANRS IC		2
IC301	⚠ UPC4557C	IC		1
IC302	LB1436	IC (MPI)		1
D103,203,104,204	0A90	Ge Diode		4
D301,303~312,313	MA150	Si. Diode		12
D302	RD5,6E (B)	Zener Diode		1
	VSK5D24-211	Relay		1
	VMJ5002-001	Mic & HP Jack Ass'y		1
S102	QSL2309-002	Lever SW	ANRS	1
S101	QSL8409-001	"	Tape Select	1
VR103	QVL6A7A-054VA	V. Resistor	REC	1
VR104	QVD8A2A-014V	"	PB	1

Computer P.W. Board Parts List

⚠ parts are safety assurance parts.
When replacing those parts, make sure to use the specified one.

Ref. No.	Parts No.	Parts Name	Remarks		Q'ty
(Reset)					
RK01	QRD141J-473SY	C. Resistor	47kΩ	1/4W	1
RK02	" -103SY	"	10kΩ	"	1
RK03	" -183SY	"	18kΩ	"	1
RK04	" -392SY	"	3.9kΩ	"	1
RK05	" -104SY	"	100kΩ	"	1
CK01	QET41CR-336N	E.Capacitor	33μF	16V	1
CK02	QET41HR-335N	"	3.3μF	50V	1
CK03	" -105N	"	1μF	"	1
DK01	MA150	Ge Diode			1
DK02	RD6,2E (B3)	Si, Diode			1
XK01,02	2SC945L (PA,KA)	Si, Transistor			2
RK06,K07,K09,K10,K11	QRD141K-103SY	C. Resistor	30kΩ	1/4W	5
RK08	" -471SY	"	470Ω	"	1
RK12	QRD141J-682SY	"	6.8kΩ	"	1
RK13	" -561SY	"	560Ω	"	1
RK14	" -102SY	"	1kΩ	"	1
RK15~K17	" -273SY	"	27kΩ	"	3
RK39	" -222S	"	2.2kΩ	"	1
RK20	" -562SY	"	5.6kΩ	"	1
RK21	" -101SY	"	100Ω	"	1
CK11	QCF11HP-102	C. Capacitor	0.001μF	50V	1
CK04	QFM41HK-104	Mylar Capacitor	0.1μF	50V	1
CK05,K06	QCS11HK-101	Ceramic Capacitor	100pF	50V	2
CK07	QFM41HK-103	Mylar Capacitor	0.01μF	50V	1
DK03,K04,K05,K07 K08,K09	MA150	Si. Diode			6
CK09,K10,K12	QCF11HP-103	C. Capacitor	0.01μF	50V	3
ICK02	HD7400	IC			1
ICK03	HD7404	"			1
(Power)					
R1	QRD141J-822SY	C. Resistor	8.2kΩ	1/4W	1
R2	⚠ QRD149J-330S	"	33Ω	"	1
R3	QRD141J-102SY	"	1kΩ	"	1
R4	⚠ QRD149J-151S	"	150Ω	"	1
C1~C4,7,8	⚠ QCF12HP-103	F.C. Capacitor	0.01μF	50V	6
C5,6	⚠ QET41ER-108N	E. Capacitor	1000μF	25V	2
C9	⚠ QET41HR-477N	"	470μF	50V	1
C10	QET41ER-107N	"	100μF	25V	1
C11	QCF11HP-102	C. Capacitor	0.001μF	50V	1
C12	⚠ QET41HR-106N	"	10μF	"	1
C13,15	QET41CR-477N	"	470μF	16V	2
C14,16,17	QET41AR-477N	"	470μF	10V	3
D1~D4,D5~D8	⚠ 10E2-B	Si. Diode			8
D9	⚠ RD24E (B3)	Zener Diode			1
D10,11	RD5,6E (B)	"			2
X1	⚠ 2SC945L (PA,KA)	Si. Transistor			1
F1,F2	⚠ QMF51A2-1R6BS	Fuse	1.6A		2
F3,F4	⚠ QMF51A2-R50BS	"	500mA		2
	TAZ000331-02	Fuse Holder			8
(Mecha. Control)					
RK22,23	QRD141J-332SY	C. Resistor	3.3kΩ	1/4W	2
RK24,25	" -272SY	"	2.7kΩ	"	2
RK26,K27	" -331SY	"	330Ω	"	2
RK28,K30,K37	" -471SY	"	470Ω	"	3
RK31,32,33,38	" -682SY	"	6.8kΩ	"	4
RK34	" -273SY	"	27kΩ	"	1
RK35	" -102SY	"	1kΩ	"	1
RK36	" -104SY	"	100kΩ	"	1
RK27	" -271SY	"	270Ω	"	1
LK01	VQZ0010-001	OSC Coil			1
CK08	QLS11HK-681	C. Capacitor	680pF	50V	1
CK13	QEW21HA-335	E. Capacitor	3.3μF	"	1
ICK01	UPD546C-132	IC			1
XK03~K07	2SC945L(QA,PA)	Si. Transistor			5

Ref. No.	Parts No.	Parts Name	Remarks		Q'ty
(Bias Control)					
R701,708	⚠ QRD149J-100S	C. Resistor	10μF	1/4W	2
R702~707	QRD141J-473SY	"	47kΩ	"	6
R709	⚠ QRD149J-331S	Unflammable Resistor	330Ω	"	1
R710	QRD141J-332SY	C. Resistor	3.3kΩ	"	1
R711~713,718,737	" -103SY	"	10kΩ	"	5
R714	" -101SY	"	100Ω	"	1
R715,720	" -472SY	"	4.7kΩ	"	2
R716,729	" -333SY	"	33kΩ	"	2
R717	" -223SY	"	22kΩ	"	1
R719,733	" -682SY	"	6.8kΩ	"	2
R721	" -153SY	"	15kΩ	"	1
R722~727,730,731, 732,734	" -273SY	"	27kΩ	"	10
R728	" -222SY	"	2.2kΩ	"	1
R735	" -683SY	"	68kΩ	"	1
R736	⚠ QRD149J-470S	Unflammable Resistor	47Ω	"	1
R738	QRD143J-103S	C. Resistor	10kΩ	"	1
R739	" -562S	"	5.6kΩ	"	1
	VMZ0005-001	Tab	Bias		1
C701,711	QFP82AJ-682	Polypropylene Capacitor	0.0068μF		2
C702	QET41ER-226N	E. Capacitor	22μF		1
C703	QFP82AJ-223	Polypropylene Capacitor	0.022μF		1
C704,707,708	QFM41HK-103	M. Capacitor	0.01μF	50V	3
C705,706	QFM41HJ-472	M. Capacitor	0.0047μF	"	2
C709	QFP82AJ-223	Polypropylene Capacitor	0.022μF		1
C710	QFM41HK-104	M. Capacitor	0.1μF	50V	1
C714	QET41HR-105N	E. Capacitor	1μF	50V	1
C715	QET41CR-227N	"	220μF	16V	1
L701	VQH1009-011	OSC Coil			1
L702	VQH1009-003	"			1
L703,704	VQP0001-102	Inductor			2
D704	RD4.3E (B3)	Zener Diode			1
D701,702,703	⚠ MA150	Si. Diode			3
X701~707	2SC945L (PK,KA)	Si. Transistor			7
X708	⚠ 2SD471 (LA,KA)	Si. Transistor			1
X709~715	2SC945L (QA,PA)	"			7
IC701	UPD4051BC or MSM4051	IC			1
(Filter)					
RF01,F04,F05,F07, F10,F11	QRD141J-223SY	C. Resistor	22kΩ	1/4W	6
RF02,F06	" -103SY	"	10kΩ	"	2
RF03,F08	" -562SY	"	5.6kΩ	"	2
RF05	" -223SY	"	22kΩ	"	1
RF09	" -102SY	"	1kΩ	"	1
RF13,14,15	" -272SY	"	2.7kΩ	"	3
CF01	QFM41HJ-822	Mylar Capacitor	0.0082μF	50V	1
CF02	" -102	"	0.001μF	"	1
CF03	" -273	"	0.027μF	"	1
CF04	QFM41HK-474	"	0.47μF,	"	1
LF01,F02	VQP0001-183S	Inductor			2
LF03	" -473	"			1
VRF01,F02,F03	QVP8A0B-014	V. Resistor			3
(A/D Convertor)					
R801	QRD141J-273SY	C. Resistor	27kΩ	1/4W	1
R802	" -562SY	"	5.6kΩ	"	1
R803,804,812,818, 820,824	" -103SY	"	10kΩ	"	6
R805	" -124SY	"	120kΩ	"	1
R806	" -682SY	"	6.8kΩ	"	1
R807	" -333SY	"	33kΩ	"	1

Ref. No.	Parts No.	Parts Name	Remarks		Q'ty
R810,821	QRD141J-392SY	C. Resistor	3.9kΩ	1/4W	2
R811	" -153SY	"	15kΩ	"	1
R813	" -223SY	"	22kΩ	"	1
R814	" -681SY	"	680Ω	"	1
R815,819	" -392SY	"	3.9kΩ	"	2
R816	" -273SY	"	27kΩ	"	1
R817	" -101SY	"	100Ω	"	1
R822	" -563SY	"	56kΩ	"	1
R823	QRD147J-122S	"	1.2kΩ	"	1
R827	QRD147J-334S	"	330kΩ	"	1
C801	QEB41HM-334M	E. Capacitor	0.33μF	50V	1
C802	QFM41HJ-224	M. Capacitor	0.22μF	"	1
C803	QET41HR-105N	E. Capacitor	1μF	"	1
C804	" -475N	"	4.7μF	"	1
VR801	QVP8A0B-014	V. Resistor	10kΩ	"	1
IC801	UPD4066C	IC			1
IC802,803	AN6552	"			2
D801	1S2075K-23	Si. Diode			1
X801,802	2SC945L (QA,PA)	Si. Transistor			2
X804	2SA733A (P,K)	"			1
X805	2SK105H	"			1
D802	MA150	Si. Diode			1
(Rec Amplifier)					
R501,601,510,610 517,617	QRD141J-472SY	C. Resistor	4.7kΩ	1/4W	6
R502,602,521	" -223SY	"	22kΩ	"	3
R503,603,518,519	" -562SY	"	5.6kΩ	"	4
R504,604,516,616	" -123SY	"	12kΩ	"	4
R505,605	" -393SY	"	39kΩ	"	2
R506,606	" -822SY	"	8.2kΩ	"	2
R507,607	" -392SY	"	3.9kΩ	"	2
R508,608	" -272SY	"	2.7kΩ	"	2
R509,609,525,625	" -222SY	"	2.2kΩ	"	4
R513~515	" -273SY	"	27kΩ	"	3
R520	" -222SY	"	2.2kΩ	"	1
R522,622	" -184SY	"	180kΩ	"	2
R523,623	" -564SY	"	560kΩ	"	2
R524,624	" -102SY	"	1kΩ	"	2
R526	⚠ QRD149J-331S	"	330Ω	"	1
R527	QRD141J-101SY	"	100Ω	"	1
VR501,601	QVP8A0B-024	V. Resistor	20kΩ		2
C501,601,502,602	QET41HR-475N	E. Capacitor	4.7μF	50V	4
C503	QET41ER-107N	"	100μF	25V	1
C504	QET41HR-106N	"	10μF	50V	1
IC501,601	UPD4051BC or MSM4051	IC			2
X501,601	2SC945L (PA,KA)	Si, Transistor			2
X502	2SC945L (QA,PA)	"			1
X503,603	2SC2001 (K.L)	"			2
D501	RD6.2E (B3)	Zener Diode			1
D502,503	MA150	Si. Diode			2
(Equalizer Control)					
R550,650	QRD141J-181SY	C. Resistor	180Ω	1/4W	2
R551,651,552,652 553,653	" -273SY	"	27kΩ	"	6
C510,610	QFM41HJ-682	M. Capacitor	0.0068μF	50V	2
C511,611	" -103	"	0.01μF	"	2
C512,612	" -123	"	0.012μF	"	2
C513,613	" -822	"	0.0082μF	"	2
C514,614	" -472	"	0.0047μF	"	2
C515,615	" -332	"	0.0033μF	"	2
C516,616	" -102	"	0.001μF	"	2
C517,617	" -562	"	0.0056μF	"	2

Ref. No.	Parts No.	Parts Name	Remarks	Q'ty
IC502,602	UPC4051BC or MSM4051	IC		2
	VKS3108-001	P.W.B. Holder	for CPU	1
	VKS3000-001	"	"	3
	E43727-002	Tab		54
CN501	QMV5005-003	Connector	E. Headwires	1
CN-B	" -009	"	(EQ ~ BIAS)	1
CN-A	" -004	"	(SENS)	1
CN-C	QMV5005-008	"	(TEST)	1
	QWY123-019	BUS WIRE	10 mm	66
	V44611-006	BUS WIRE	7.5 mm	1

Mecha Control P.W. Board Parts

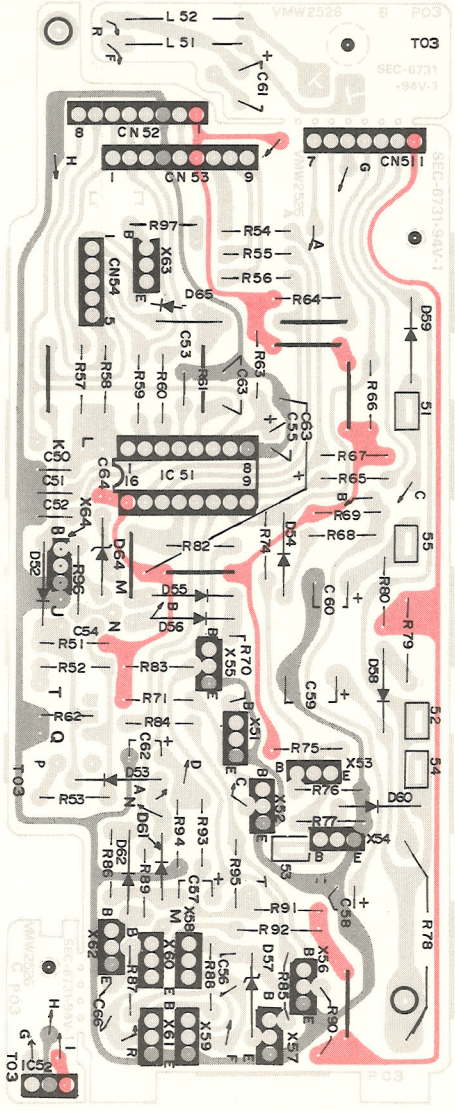

Mechanical Control P.W. Board Parts List

⚠ parts are safety assurance parts.
When replacing those parts, make sure to use the specified one.

Ref. No.	Parts No.	Parts Name	Remarks		Q'ty
	⚠ VMW2526-003	P.W. Board			1
R51	QRD147J-223S	C. Resistor	33kΩ	1/4W	1
R52	QRD147J-473S	"	47kΩ	"	1
R53,69,87~89	QRD147J-222S	"	2.2kΩ	"	5
R54,55	QRD147J-271S	"	270Ω	"	2
R56	QRD147J-331S	"	330Ω	"	1
R57-60,70,74	QRD147J-472S	"	4.7kΩ	"	6
R61,65,97	QRD147J-102S	"	1kΩ	"	3
R62	QRD141J-273S	"	27kΩ	"	1
R63	QRD147J-823S	"	82kΩ	"	1
R64,66,67	QRD147J-152S	"	1.5kΩ	"	3
R68	QRD147J-101S	"	100Ω	"	1
R71,75	QRD147J-561S	"	560Ω	"	2
R76,77,96	QRD147J-103S	"	10kΩ	"	3
R78	⚠ QRX039J-391	OMF Resistor	390Ω	"	1
R79	⚠ QRH124J-220	Fusible Resistor	22Ω	1/2W	1
R80	⚠ QRD149J-150S	Unflammable Resistor	15Ω	1/4W	1
R82,84,85	QRD147J-682S	C. Resistor	6.8kΩ	"	3
R83	QRD147J-122S	"	1.2kΩ	"	1
	V44611-008	"			1
R90,91	QRD147J-182S	"	1.8kΩ	1/4W	2
R92	⚠ QRH124J-220	Fusible Resistor	22Ω		1
R93	QRD147J-124S	C. Resistor	120kΩ	1/4W	1
R94	QRD147J-153S	"	15kΩ	"	1
R95	QRD147J-223S	"	22kΩ	"	1
C50,51,52,53,56,64	QCF11HP-103	F.C. Capacitor	0.01μF	50V	6
C54	QEN41FA-105	Non-polarized E. Capacitor	1μF	25V	1
C55	QEB41HM-474M	E. Capacitor	0.47μF	50V	1
C57	QET41ER-226N	"	22μF	25V	1
C58	QET40JR-476N	E. Capacitor	47μF	6.3V	1
C59	QET41VR-108N	"	1000μF	35V	1
C60	QET41ER-227N	"	220μF	25V	1
C61	QET41HR-105N	"	1μF	50V	1
C62	QET41CR-476N	"	47μF	35V	1
C63	QET41HR-105N	"	1μF	50V	1
C65	QET41HR-106N	"	10μF	50V	1
C66	QCF11HP-103	F.C. Capacitor	0.01μF	50V	1
L51,52	T41572-001	Inductor			2
X51,53,55~57, 62,64	2SC945L (PA,KA)	Si Transistor			7
X52,54	⚠ 2SD571 (LA,KA)	Si Transistor			2
X58,60	⚠ 2SD471 (LA,KA)	"			2
X59,61	⚠ 2SC2001 (L,K)	"			2
X63	2SC945L (PA,KA)	"			1
	VMW2526-003B	P.W. Board	Mecha. Con.		1
	VMW2526-003C	"	Reel Motor		1
IC51	M54886P	IC			1
IC52	DN6835	Hall IC			1
D52,53,54,55,56,61, 62,65	MA150	Si Diode			8
D57	RD6.2E (B3)	Si Diode			1
D58,59,60	10E1-B	Si Diode			3
D64	RD6.2E (B3)	Zener Diode			1
7P CN51	QMV5004-007	Connector (R.C+1)			1
8P CN52	QMV5004-008	" (CPU)			1
9P CN53	QMV5005-009	" (Knob SW)			1
5P CN54	QMW5004-005	" (Memory SW)			1
E40130-001	Tab (Wire)				5

Other P.W. Board Parts

Capstan motor

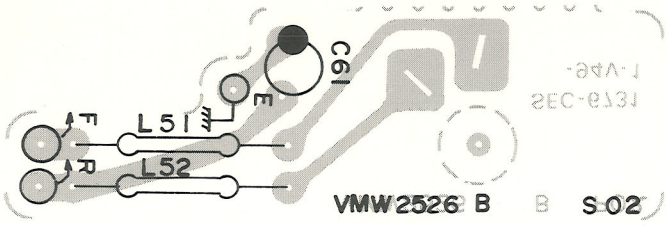

Power transistors

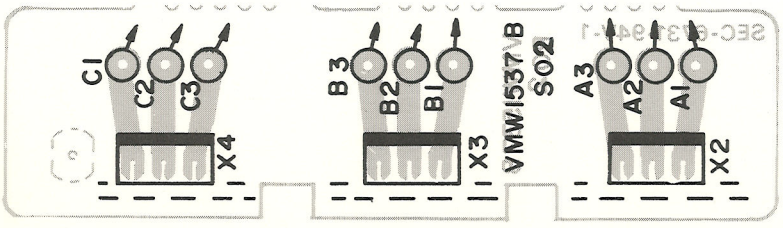

LED indicators

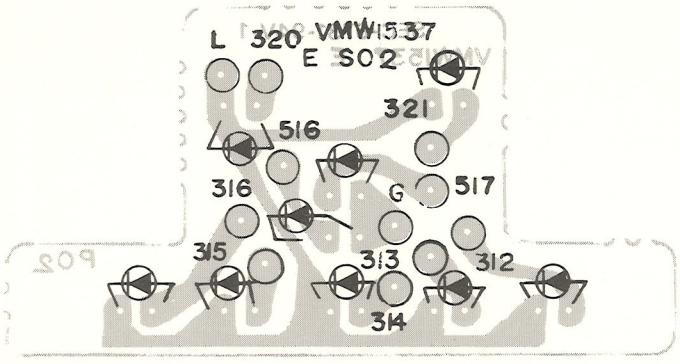

Slide switch

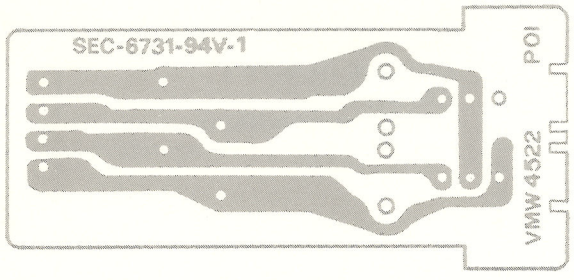

Hall IC

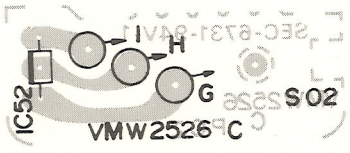

Start switch

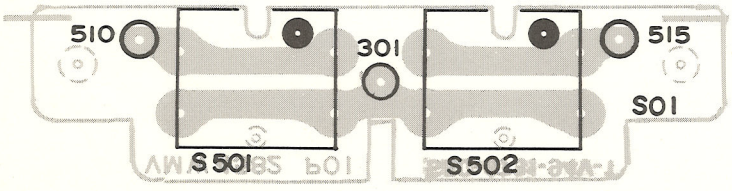

Power switch

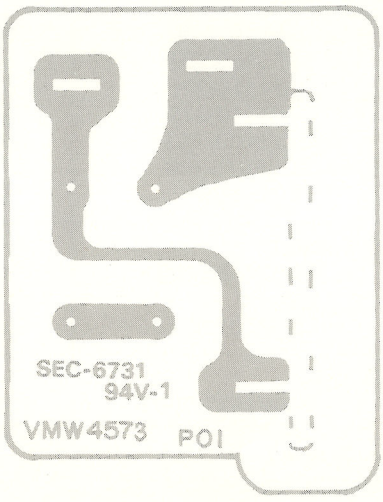

Reel motor

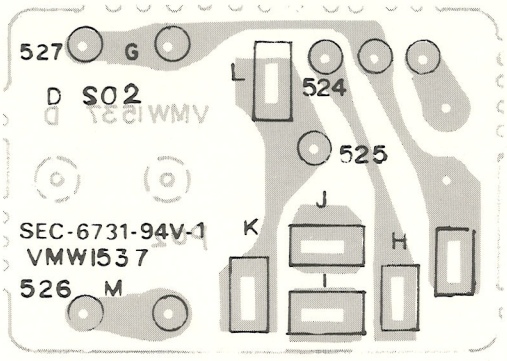

Timer switch

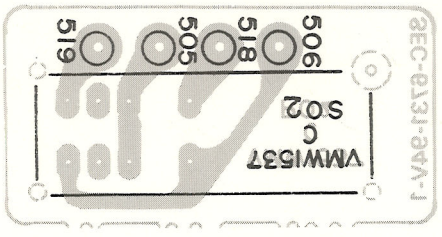

Back light

Memory switch

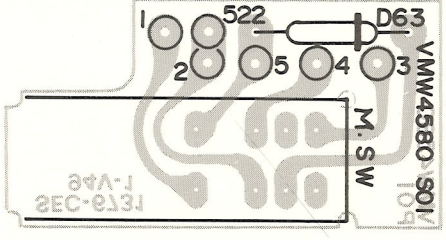

Other P.W. Board Parts List

Ref. No.	Parts No.	Parts Name	Remarks	Q'ty
(Power Switch)				
	⚠ VMW4577-001	P.W. Board		1
S1	⚠ QSP1110-222	Power Switch	KD-A66J	1
S1	⚠ QSP1110-221	Power Switch	KD-A66B	1
S1	⚠ QSP1110-226	Power Switch	KD-A66U	1
CS1	⚠ QCZ9014-103	C. Capacitor	KD-A66J	1
CS1	⚠ QCZ9015-103	C. Capacitor	0.01μF	1
	E40130-001	Tap		
(Memory Switch)				
	VMW4580-002	P.W.B.		
D63	MA150	Si Diode		1
	QSS2301-102	Slide Switch		1
(Timer Switch)				
	VMW1537-003C	P.W.B		1
	QSS2301-102	Slide Switch		1
(Power Supply Transistors)				
	VMW1537-003B	P.W.B		1
X2,3	2SD743 (Q.R)	Si. Transistor		2
X4	2SD882 (P.Q)	"		1
	VYH4519-001	Heat Sink (1)		1
	VYH4520-001	Heat Sink (2)		1
(Back Light)				
	VMW4566-001	P.W.B		1
	QLP3601-003	Lamp		1
(Mecha. Control Switch) — Touch Switch Ass'y —				
	VST0005-002	Switch Unit Ass'y		1
	SLP-114BV	LED	REC	1
	SLP-214BV	LED	Play, Pause	2
(Start Switch)				
	VMW4582-001	P.W.B		1
(Display)				
	VMW1537-003E	P.W.B		1
LD1~5,7~9	GL-9PR2	LED	Rec x 1 Multi-peak Level x 5 Computer (Error) x 1 ANRS x 2	9
LD6	GL-9NG2	LED	Green Computer (Run)	1
(Hall IC)				
	VMW2526-003B	P.W.B		1
IC52	DN6835	Hall IC		1
(Reel Motor)				
	VMW2526-003C	P.W.B		1
L51,52	T41572-001	Inductor		2
C61	QET41HR-105N	E. Capacitor		1
(Slide Switch)				
	VMW4522-001	P.W.B (L)		1
	QSP0029-001	Slide Switch		2
	QMV5004-004	Connector		1

Packing

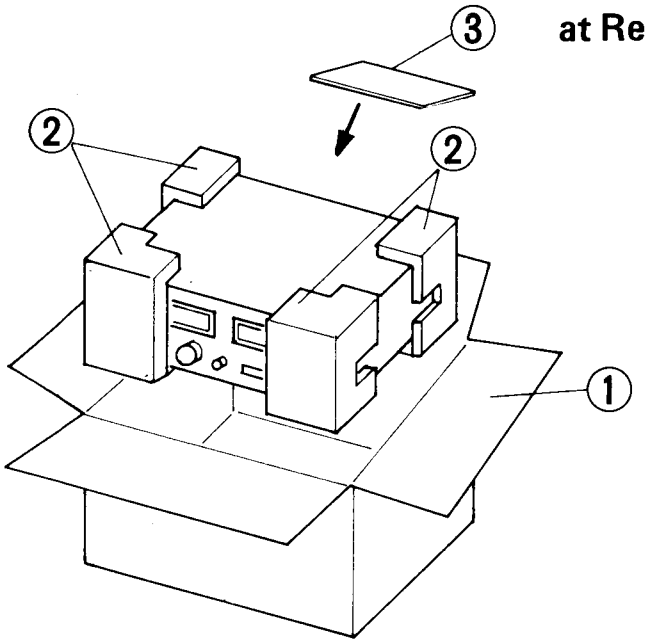

Positions of Controls and Switch Knobs at Renew Packing

Power Switch	:	OFF
Timer Switch	:	OFF
ANRS Switch	:	ON
Tape Select Switch	:	SA/CrO2
Input Level Control	:	min.
Output Level Control	:	max.
Memory Switch	:	OFF

Packing Material Parts List

Ref. No.	Parts No.	Parts Name	Remarks	Q'ty
1~2	VPA3137-00B	Packing Case Ass'y	KD-A66A/B/E/J/U	1 set
"	" -00C	"	KD-A66C	1 set
1	VPA3137-004	Case	KD-A66A/B/E/J/U	1
1	" -005	"	KD-A66C	1
2	VPH1205-001	Cushion	Left	1
2	VPH1206-001	"	Right	1
	QPGA060-06505	Envelope	for Set	1
	AP4056A-036	"	for Power Cord, Provided Cord	2
3	QPGB024-03404	"	for Instruction Book	1
	TKS000501-01	Sheet	for Set	1

Accessories

Parts No.	Parts Name	Remarks	Q'ty
VMP0002-00A	PIN Cord	KD-A66A/C/J/U	2
CN-201	DIN Cord	KD-A66B/E	1
VYA4001-00A	Head Cleaning Stick		1
VNN0055-301	Instruction Book		1
BT20029B	Warranty Card	KD-A66A	1
VND4013-001	Warning Label	for Disconnection, KD-A66A	1
T46328-003	Caution Label	for Voltage Selector, KD-A66A	1
BT20013C	Guarantee Certificate	KD-A66B	1
TLJ000443-01	Seal	Made in Japan, KD-A66B	1
	BEAB Label	KD-A66B	1
VND4013-001	Warning Label	for Disconnection, KD-A66B/E	1
QZL1002-003BS	"	for 2-pin Power Cord, KD-A66B	1
T46328-003	Caution Label	for Voltage Selector, KD-A66B	1
VNC5004-001	Mark Sticker	DIN45 500, KD-A66B/E	1
BT20025C	Warranty Card	KD-A66C	1
T44362-001	CSA Marker	KD-A66C	1
TLT000505-01	UL/CSA Caution Label	KD-A66C/J	2
T46328-004	Caution Label	for Voltage Selector, KD-A66E	1
BT20032B	Warranty Card	KD-A66J/U for PX, EES	1
BT20042	Special Reply Card	KD-A66J	1
E7795-1	EP Mark	KD-A66U for PX, EES	1
V04062-001	Siemens Plug	KD-A66U	1
T46328-001	Caution Label	KD-A66U	1